Evaluating 10GBASE-SX CWDM

Bill Wiedemann

Blaze Network Products Inc.

billw@blazenp.com

IEEE 802.3ae Interim Meeting

Ottawa

May 2000

BLAZE NETWORK PRODUCTS

53 Individuals - 29 Companies

Steven Swanson, Corning; Paul Kolesar, Lucent; Hari Naidu, Fujikura; John George, Lucent; Jay Malin, Molex; Robert Bryan, Mode; Steve Dreyer, nSerial; Atikem Haile-Mariam,Intel; Fred Mohambi, Broadcom; Doug Collins, Mode; Bob Pollock, Corning; Rick McCormick, Emcore; Giorgio Garretta, Lucent; Jaime Kardontchik, MicroLinear; Eric Grann, Blaze; Michael Laudon, Force10 Networks; Stefan Wurster, MicroLinear; Ken Herrity, Blaze; Siva Yegnanarayanan, Cognet uSystems; Hank Zaninni Avici; Ed Chang, NetWorth; Rich Taborek, nSerial; Michael Fisk, MRV; Don Alderou, nSerial; Scott Shaeffer, Tyco; Allen Dixon, Siecor; John Dallesasse, Molex; Tony Whitlow, Molex; Al Yuen, Alvesta; Bill Wiedemann, Blaze; Mike Bradley, Unisys; Mike Hackert, Corning; Jeff Porter, Motorola; Peter Pondillo, Corning; Steve Tiedens, Motorola; Kevin Rowett, Force10 Networks; Len Young, Corning; Herb Congdon,AMP Netconnect; Kirk Bovill, Blaze; Mitch Jansen, Bandwidth9; Jim Tatum, Honeywell; Phil Auld, Honeywell; Henning Lysdal, Giga; Mark Donhowe, Gore; David Hinzel, ETA; David Hyer, Compaq; Pat Kelly, Intel; Brian Peters, Blaze; John Abbot, Corning; Nariman Yousefi, Broadcom; Tom Palkert, AMCC; Joel Goergen, Force10 Networks; Fred Winegar, Vitesse

BLAZE NETWORK PRODUCTS

10GBASE-SX CWDM

- Meets all five criteria
  - Broad market potential
  - Technical feasibility
  - Compatibility
  - Distinct identity
  - Economic feasibility

BLAZE NETWORK PRODUCTS

10GBASE-SX CWDM

- Meets both MMF distance objectives
  - 100m on installed fiber
  - 300m on MMF
- Ability to meet the IEEE 802.3ae schedule

BLAZE NETWORK PRODUCTS

10GBASE-SX CWDM

- The majority of installed links are multi-mode
- Lowest EMI solution
- Lowest power solution
- Early availability
- Multi-vendor support
- Lowest cost solution

BLAZE NETWORK PRODUCTS

Broad Market Appeal

- Highest volume are short distance links
- Important to have a low cost solution for the highest volume requirement

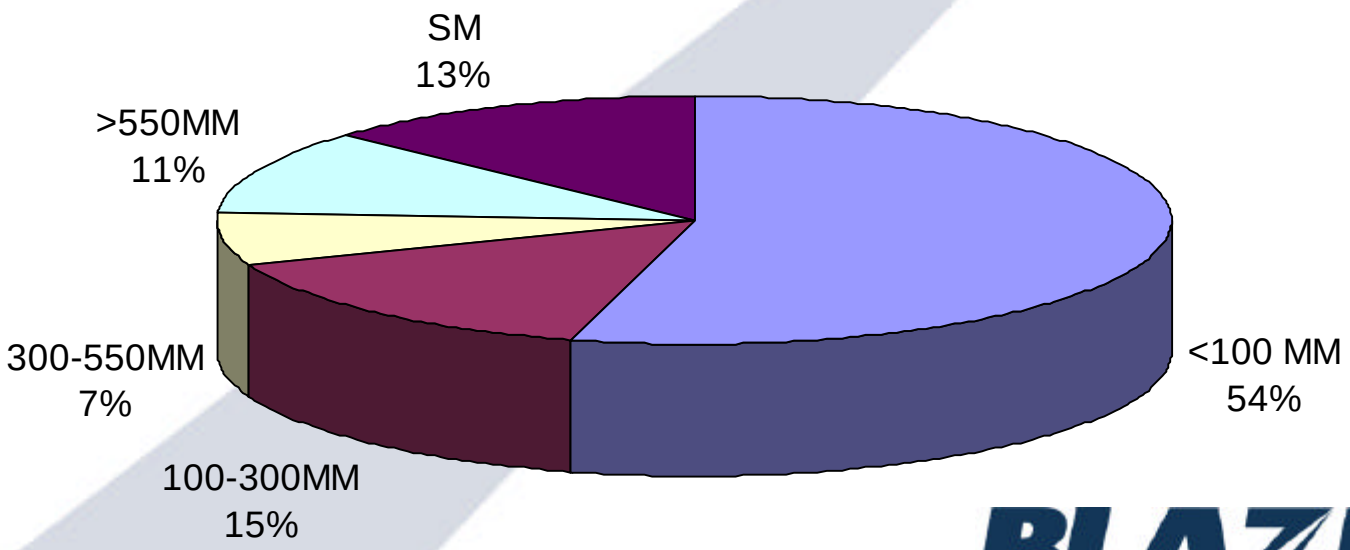

BLAZE
NETWORK PRODUCTS

Broad Market Appeal

- 2-3 times cost difference between SX/LX at 1Gigabit generated 5:1 volume market
- 2-3 times cost difference at 10 Gigabit will generate **large** market for 10GBASE-SX

BLAZE NETWORK PRODUCTS

Functional Blocks

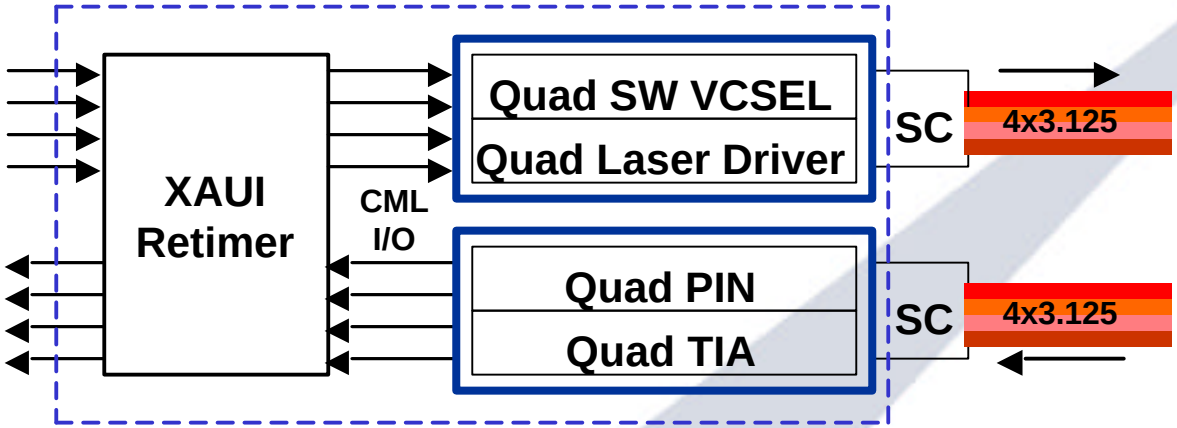

- Electrical interface chip - four lane retimer
  - no 8B/10B encoder
  - no 64B/66B encoder
  - no 4:1 mux/demux

BLAZE NETWORK PRODUCTS

Lowest power solution

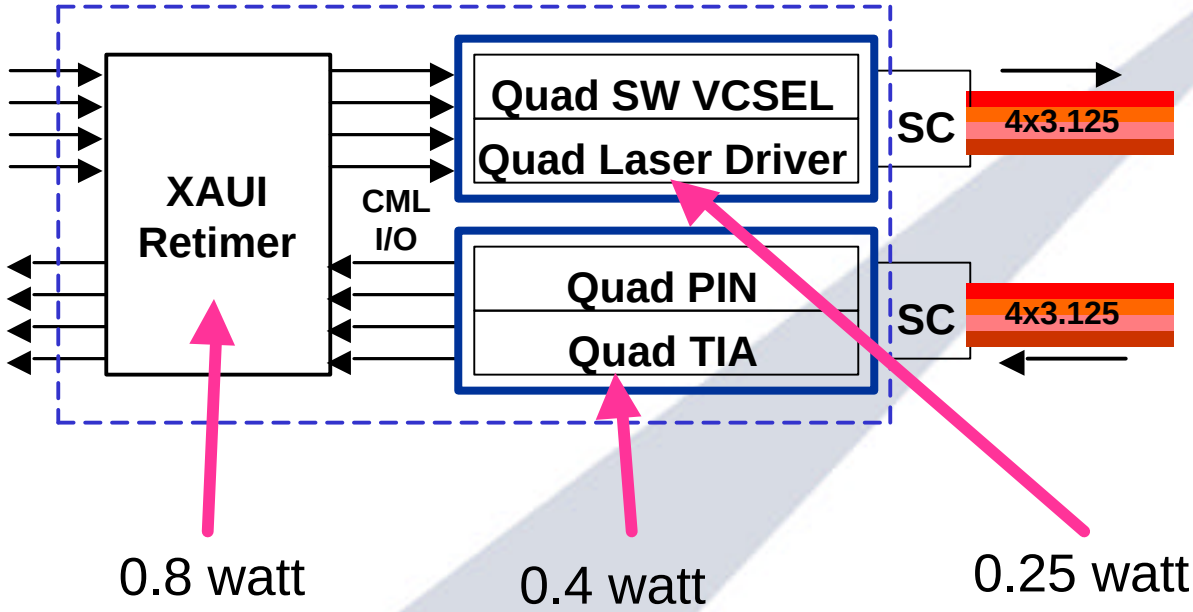

- Low power solutions enable high density applications (small form factors, plugable)

BLAZE
NETWORK PRODUCTS

Lowest EMI solution

- Low power = low radiation
- Highest Fundamental - 3.125 GHz
- No internal recoding minimizes generated EMI
- EMI of incoming 8B/10B idle sequence being addressed in MAC

BLAZE NETWORK PRODUCTS

Multi-mode Construction

- **Uses inexpensive multi-mode optics & lasers**
  - plastic optics
  - low cost multi-mode sources
  - no temperature control
  - fast and easy assembly

BLAZE NETWORK PRODUCTS

Mux/Demux Coupling Optics

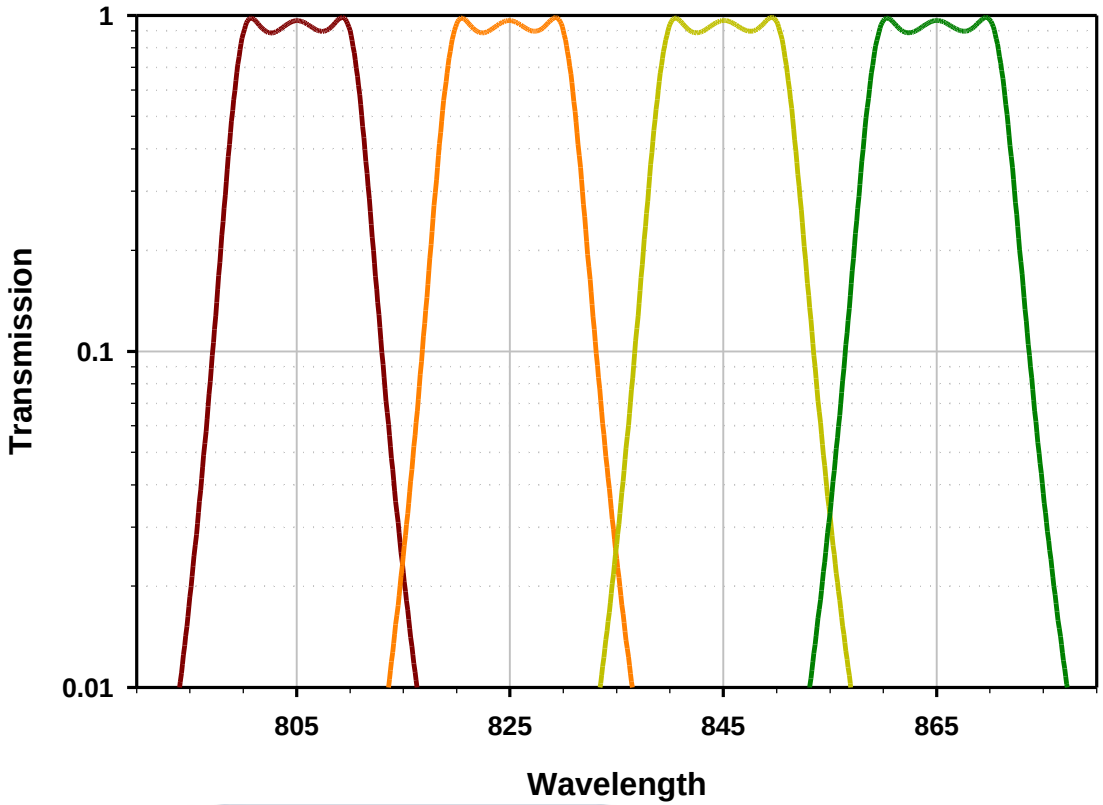

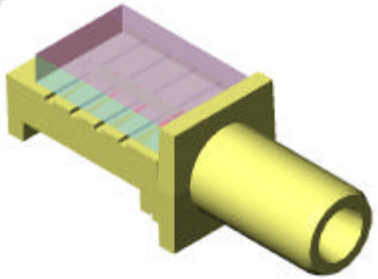

BLAZE
NETWORK PRODUCTS

Performance at 3.125 Gbps

62.5 µm Fiber

2 m

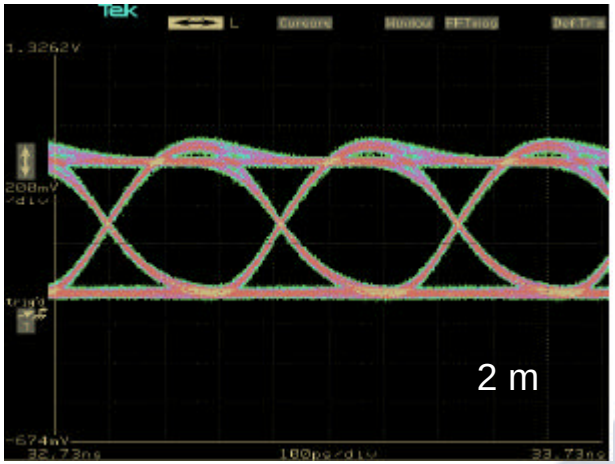

100 m

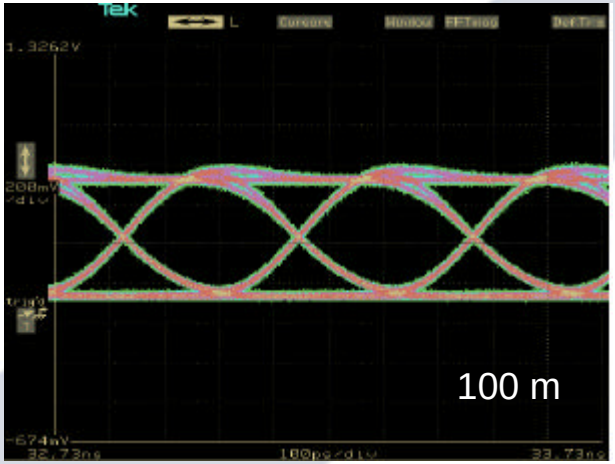

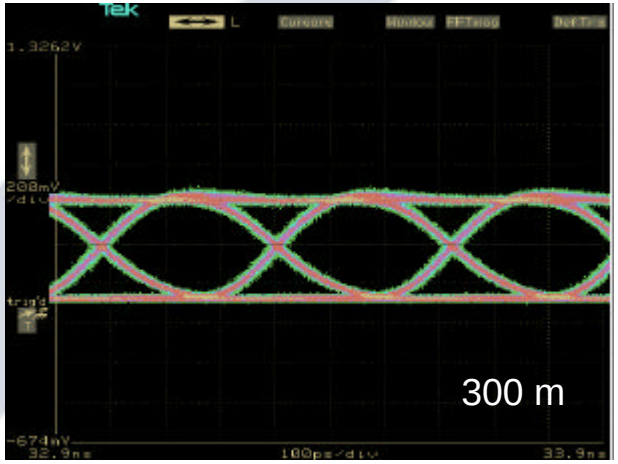

300 m

BLAZE NETWORK PRODUCTS

Performance at 3.125 Gbps

50 µm Fiber

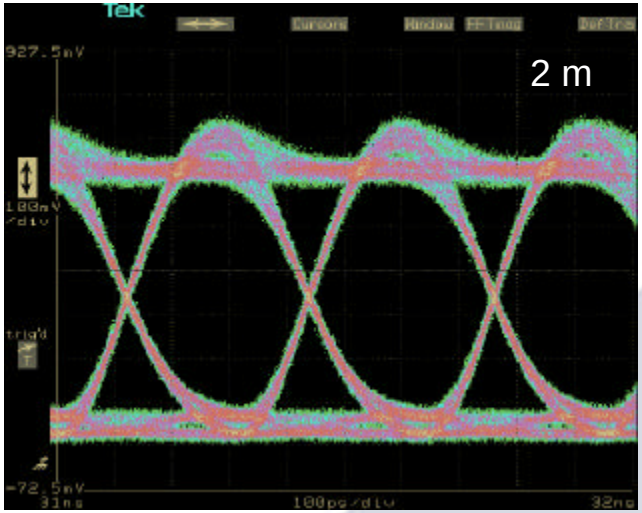

2 m

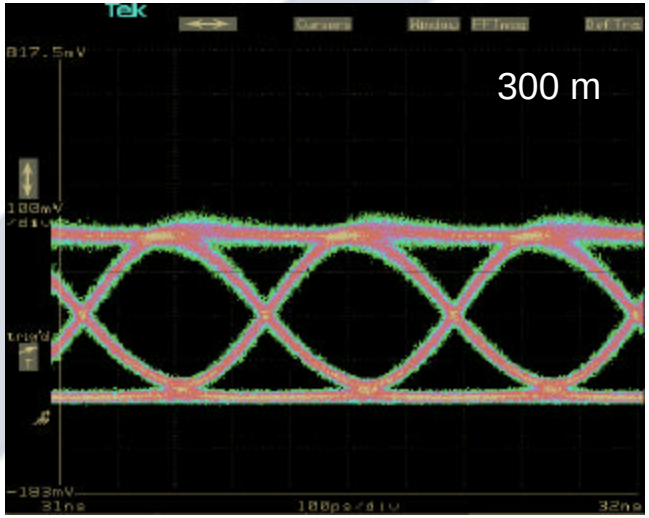

300 m

BLAZE
NETWORK PRODUCTS

Early Availability

- Lasers Summer 2000
- XAUI retimer Summer 2000
- Laser drivers Summer 2000
- TIAs Summer 2000

- **Complete transceiver - Q4 2000**

BLAZE NETWORK PRODUCTS

Table 38-2* Operating Range

Fiber type	Modal bandwidth @ 850nm (MHz*km)	Minimum range (meters)
62.5µm MMF	160	2-100
50.0 µm MMF	500	2-300
50.0 µm MMF (new)	2200	2-550
10µm SMF	N/A	Not supported

* Equivalent for 10GBASE-SX CWDM

BLAZE NETWORK PRODUCTS

Table 38-3* Transmit

Description	62.5 mm MMF 50 mm MMF 50 mm MMF (new)	Unit
Transmitter Type	Shortwave Laser	
Signaling speed per channel (range)	3.125 ± 100 ppm	GBd
Wavelength (range), four channels	800 to 870	nm
Channel center wavelengths	805, 825, 845, 865 ± 5.0 nm	nm
Channel separation	20.0	nm
Trise/Tfall (max. 20-80% response time)	100	ps
RMS spectral width (max)	0.5	nm
Average launch power, four channels (max)	+4.7	dBm
Average launch power per channel (max)	-1.3	dBm
Average launch power per channel (min)	-5.5	dBm
Extinction ratio, (min)	7	dB
RIN (max)	-120	dB/Hz

* Equivalent for 10GBASE-SX CWDM

BLAZE NETWORK PRODUCTS

Table 38-4* Receive

Description	62.5mm MMF	50.0 mm MMF	50.0 mm MMF (new)	Unit
Signaling speed per channel (range)	3.125 ± 100 ppm			Gbd
Wavelength (range), four channels	800 to 870			nm
Channel center wavelengths	805, 825, 845, 865 ± 5.0 nm			nm
Channel separation	20.0			nm
Avg receive power, four channels (max)	+4.7			dBm
Avg receive power, per channel (max)	-1.3			dBm
Return loss	12			dB
Receive electrical 3 dB upper cutoff freq (max)	3750			MHz
Receive sensitivity	-13.5	-13.5	-13.5	dBm
Stressed receive sensitivity	-7.8	-8.5	-9.4	dBm
Vertical eye closure penalty	3.6	3.6	1.4	dB

* Equivalent for 10GBASE-SX CWDM

BLAZE NETWORK PRODUCTS

Table 38-5* Link Power Budget

Parameter	62.5mm MMF	50.0 mm MMF		Unit
Modal bandwidth as measured at 850nm (min overfilled launch)	160	500	2200	MHz*km
Link power budget	8.0	8.0	8.0	dB
Operating distance	100	300	550	m
Wavelength	800 - 870			nm
Channel insertion loss	1.8	2.5	3.5	dB
Link power penalties	4.3	4.4	2.1	dB
Unallocated margin in link power budget	1.8	1.0	2.4	dB

* Equivalent for 10GBASE-SX CWDM

BLAZE NETWORK PRODUCTS

Table 38-10* Equivalent Jitter

Compliance point	Total Jitter		Deterministic Jitter	
	UI	ps	UI	ps
TP1	0.240	76.8	0.100	32.0
TP1 to TP2	0.284	90.9	0.100	32.0
TP2	0.431	138.0	0.200	64.0
TP2 to TP3	0.170	54.4	0.050	16.0
TP3	0.510	163.4	0.250	80.0
TP3 to TP4	0.332	106.2	0.212	67.8
TP4	0.749	239.6	0.462	147.8

* Equivalent for 10GBASE-SX CWDM

BLAZE NETWORK PRODUCTS

PMD Selections

	100m Installed MMF	300m MMF	2 – 10km SMF	40km SMF	Power	EMI	Cost
850 Serial		↔			H	H	X
1300 Serial			↔		H	H	1.8X
1500 Serial			↔	↔	H	H	5X
850 CWDM	↔	↔			L	L	X
1300 WWDM	↔	↔	↔		M	L – M	3X

BLAZE NETWORK PRODUCTS