Similarities of PMD and DMD for 10Gbps Equalization

Moe Win
Jack Winters

win/jhw@research.att.com
AT&T Labs-Research

(Some viewgraphs and results curtesy of Julien Porrier)

Outline

- Polarization Mode Dispersion (PMD) in single mode fibers over long distances can create ISI similar to DMD
  - ISI due to PMD generates two pulses with random delay and amplitude - can cause eye closure
- Implemented Nonlinear Canceler (NLC)
  - 10 Gbps GaAs IC (fabricated by Rockwell)
  - 2-bit and 3-bit cancellation
  - 800 gates/5W, 1995

Outline (cont.)

- NLC implemented (without A/D) using feedforward structure for speed:
  - 4 parallel decision circuits with manually set thresholds (also built 1.7 Gbps *fully adaptive* equalizer (1991) with discrete components)
  - Output chosen based on previously detected symbols
- NLC IC best for postcursor ISI
  - IC required external analog feedforward equalizer (FFE) to better mitigate precursor ISI
- NLC (versus DFE) mitigates nonlinear impairments such as ASE noise

Birefringence: group velocity

(very narrow spectrum => first order approximation)

- x and y directions carried the different phase velocity
  => eigenstates of an phase velocity operator

- Eigenstates for the group velocity exist:

  Principal States of Polarization

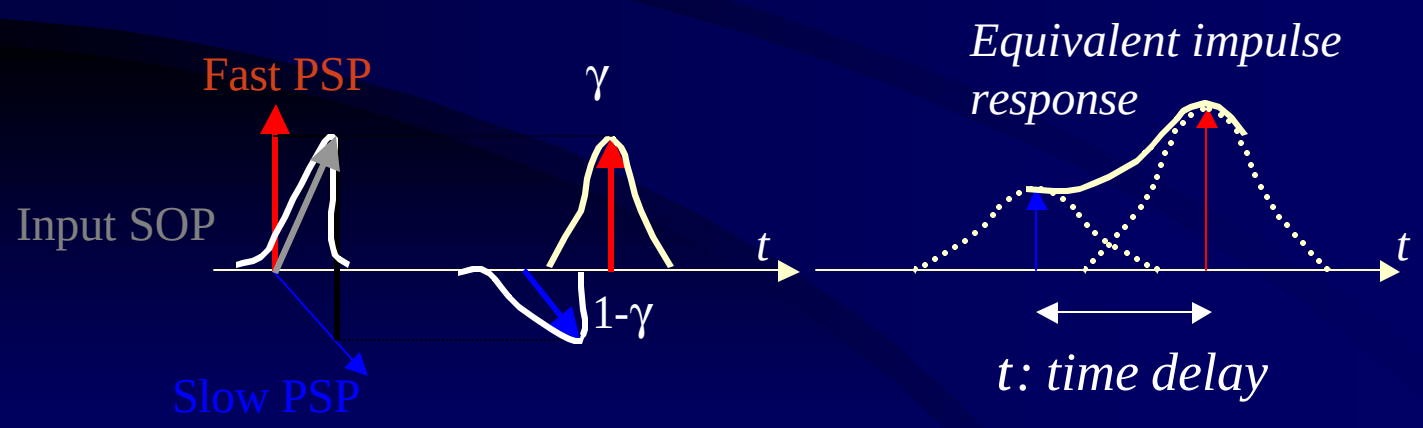

PMD characteristics

- PMD is a random process
  - γ has a uniform distribution
  - The Differential Group Delay (DGD)
    - Maxwellian distribution
    - Decays slowly => high probability of high DGD
    - Requires to have less than 1 dB penalty* at 3 times the <DGD>
- PMD is frequency dependent:
  - Channel per Channel mitigation
  - Nonlinear mitigation
  - Induces 14 copies of the pulses instead of 2:

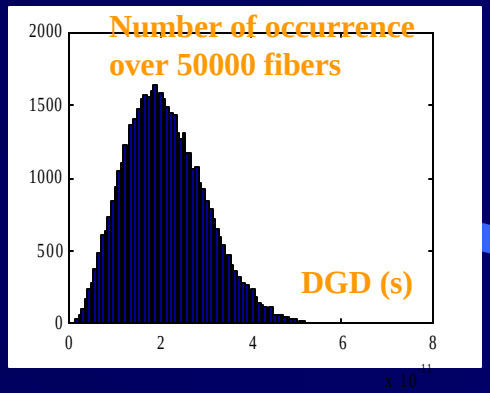

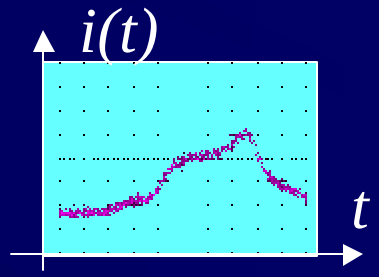

Multipath channel similar to DMD

PMD mitigation requirements

- PMD
  - Stochastic process
  - Amplitude γ:
    - Uniform distribution
  - DGD
    - Maxwellian distribution
  - Higher orders

- Mitigation
  - Adaptive
  - keep 1dB penalty even at high DGD
  - Channel per channel
  - Nonlinear effects
  - Cheap
  - Transparent
  - Global improvement

Electronic Mitigation

- Linear Equalization
  - Principle
  - Performances
  - Implementation
- Nonlinear Cancellation (NLC)
  - Principle
  - Performances
  - Implementation
- Experimental verification
- Performance degradation in case of Optical Noise

Linear Equalization

- Principle:

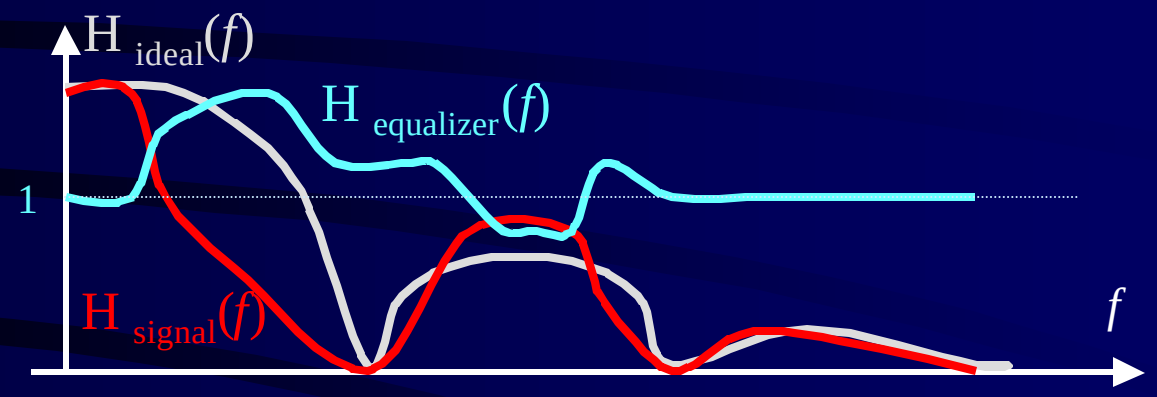

  - Time domain: add and subtract copies (Laplace transform of the inverted channel) of the signal to itself to remove ISI
  - Frequency domain: filter the received signal to recover the ideal spectrum (if linear impairment)
  - Note: always enhance the noise

Feed Forward Equalizer

Feed forward equalizer

- Add and subtract retarded copies of the signal to itself at different times (tap delay lines)
- Suppress linear ISI due to future bits
- Does not work if the eye is closed

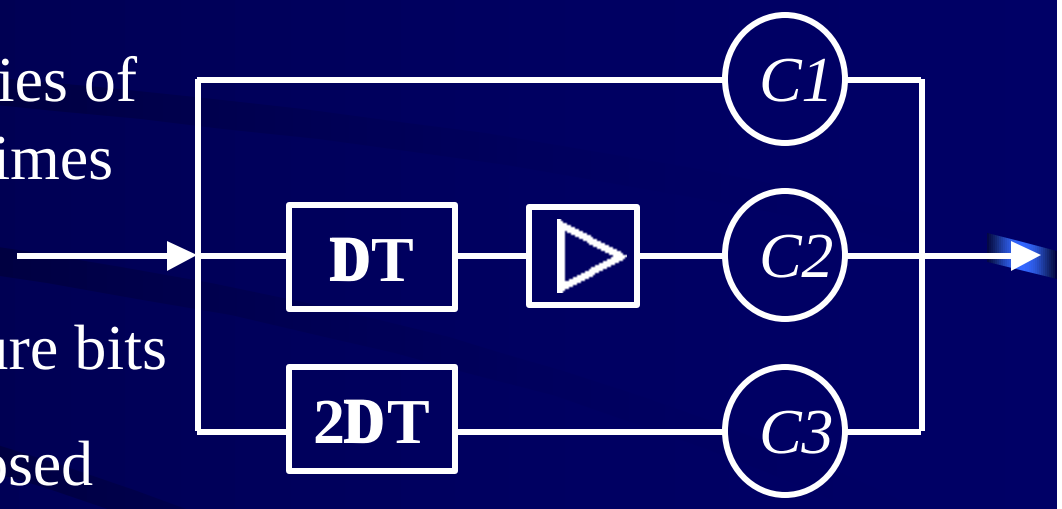

ISI: InterSymbol Interference

Nonlinear Canceler (NLC)

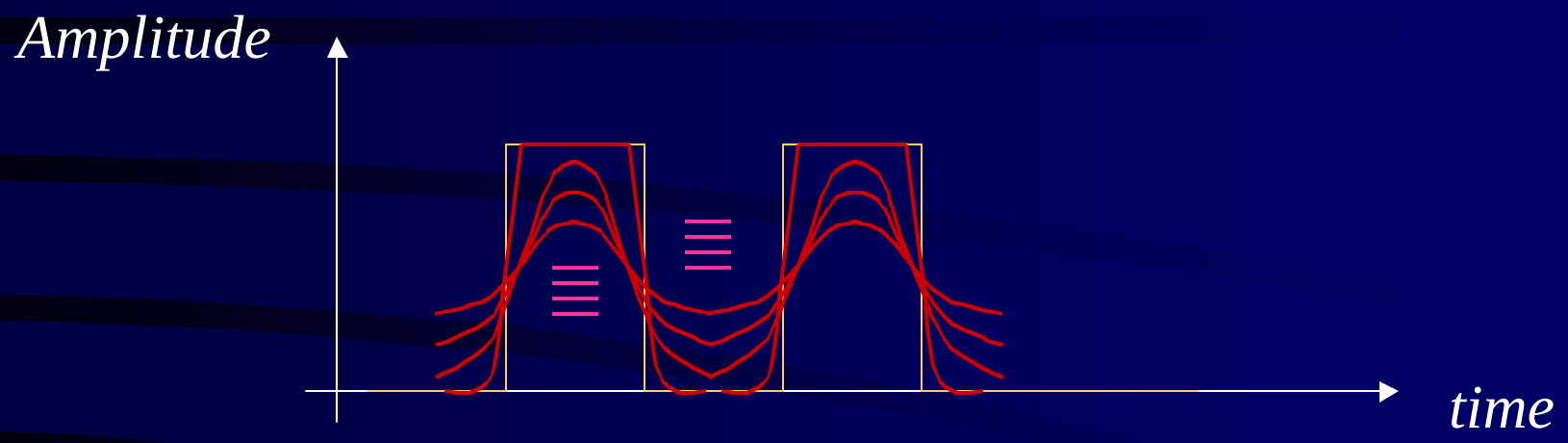

- Principles:
  - Adapt the threshold to the ‘situation’ (ISI)
    - ISI from previous bit : **S(k) = x(k) + a · x(k-1)**
    - normalization : **S(k) = (x(k) + a · x(k-1))/(1+a)**
    - pattern dependent optimum thresholds :

TH1 = 1/2 + a/(2+2a)

TH0 = 1/2 - a/(2+2a)

(at the midpoint of the expected values of 1 and 0)

4 levels eye for $\alpha \approx 3/4$: Optimum thresholds

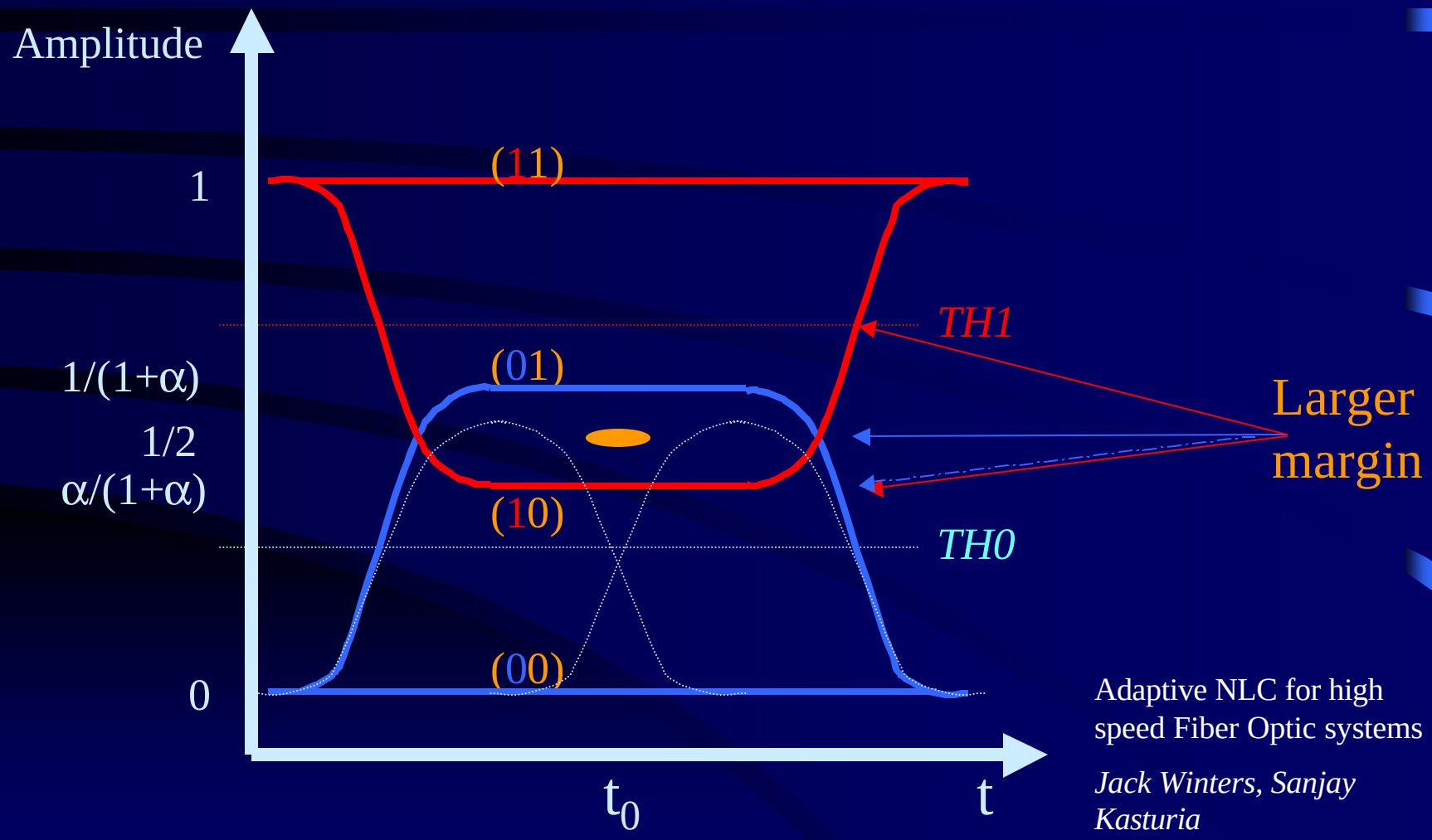

Adaptive NLC for high speed Fiber Optic systems

Jack Winters, Sanjay Kasturia

JLT Vol 10 No 7 July 1992

Consequences

- Limits:
  - 3 dB power penalty when the eye is closed (worst case)
  - Does not consider future bits => FFE is needed

- Implementation:

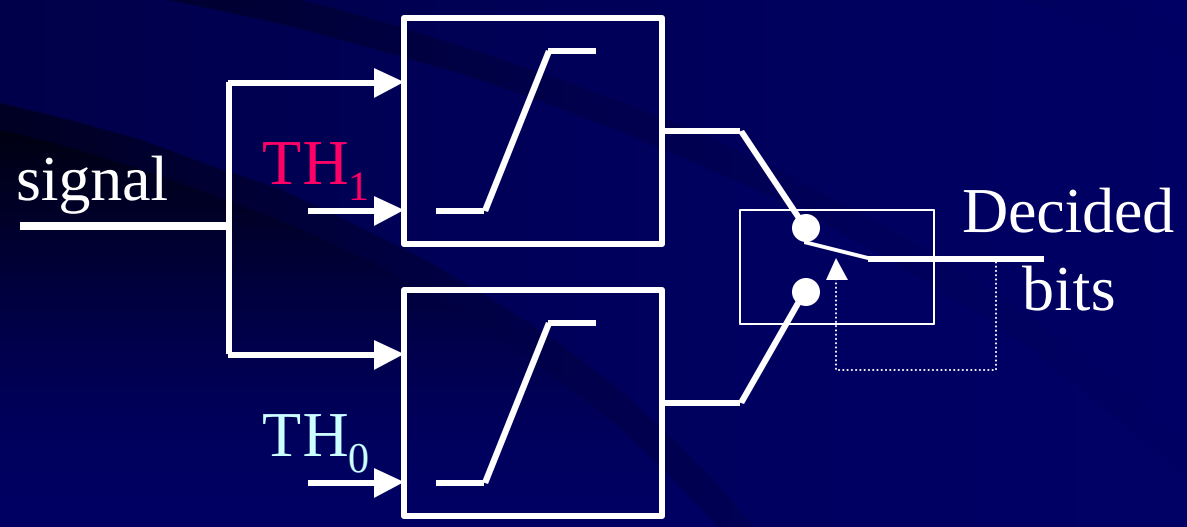

Performance

- Experiments:
  - Demonstrate the improvement given by the 2-bit canceller
    (a device considering only the two previous bits)
  - Verify our simulation for generalization
- Principle:
  - 10 Gbits/s transmission
  - First order PMD
  - Measurement of the reduction in penalty given by the NLC

Set up

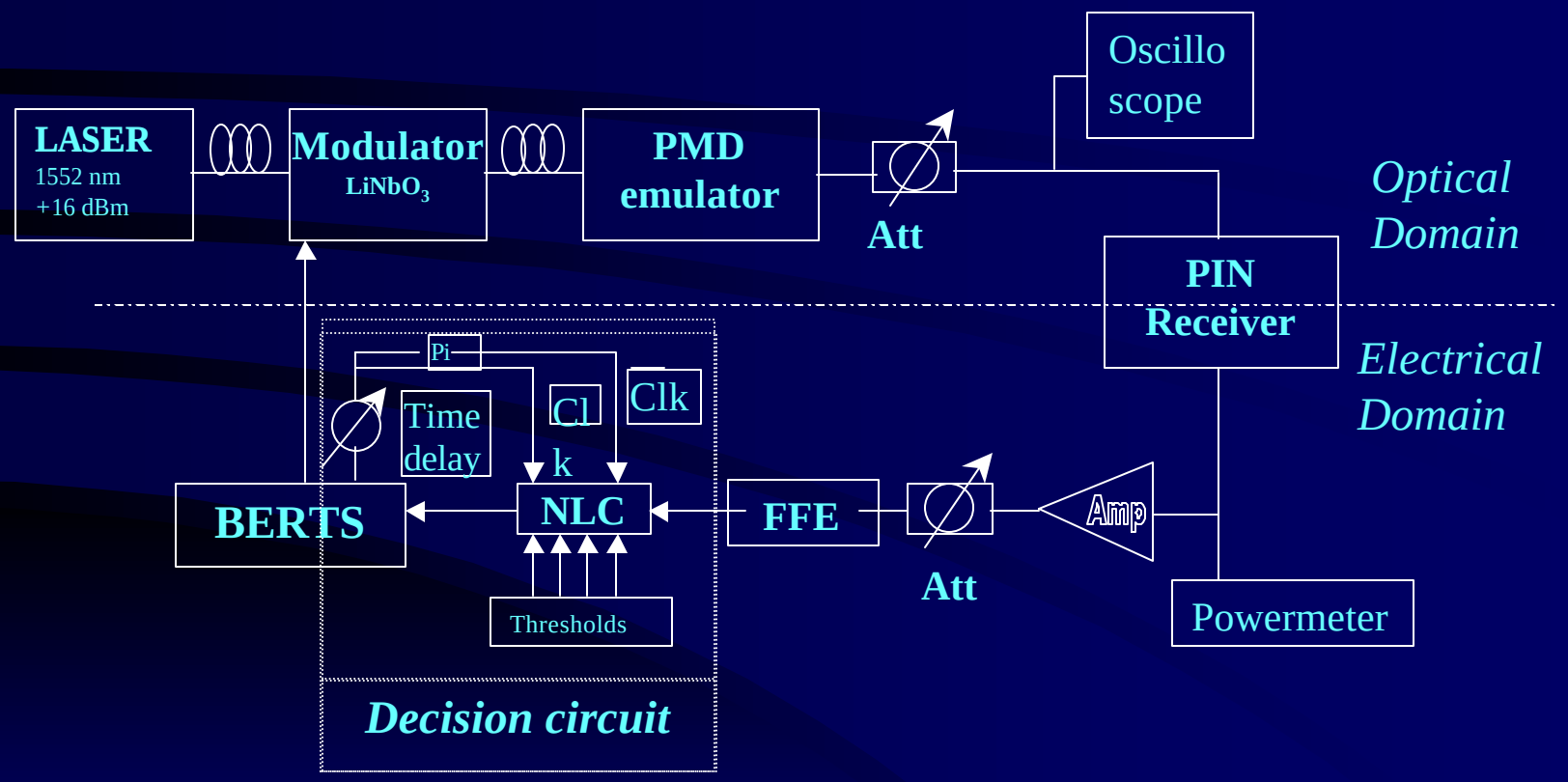
LASER
1552 nm
+16 dBm
Modulator
LiNbO3
PMD
emulator
Att
Oscillo
scope
Optical
Domain
PIN
Receiver
Electrical
Domain
Pi
Time
delay
Cl
k
Clk
BERTS
NLC
FFE
Att
Amp
Thresholds
Powermeter
Decision circuit

Asymmetrical behavior of the NLC

Comparison of the experimental results for 25/75 and 75/25 at 10 Gb/s

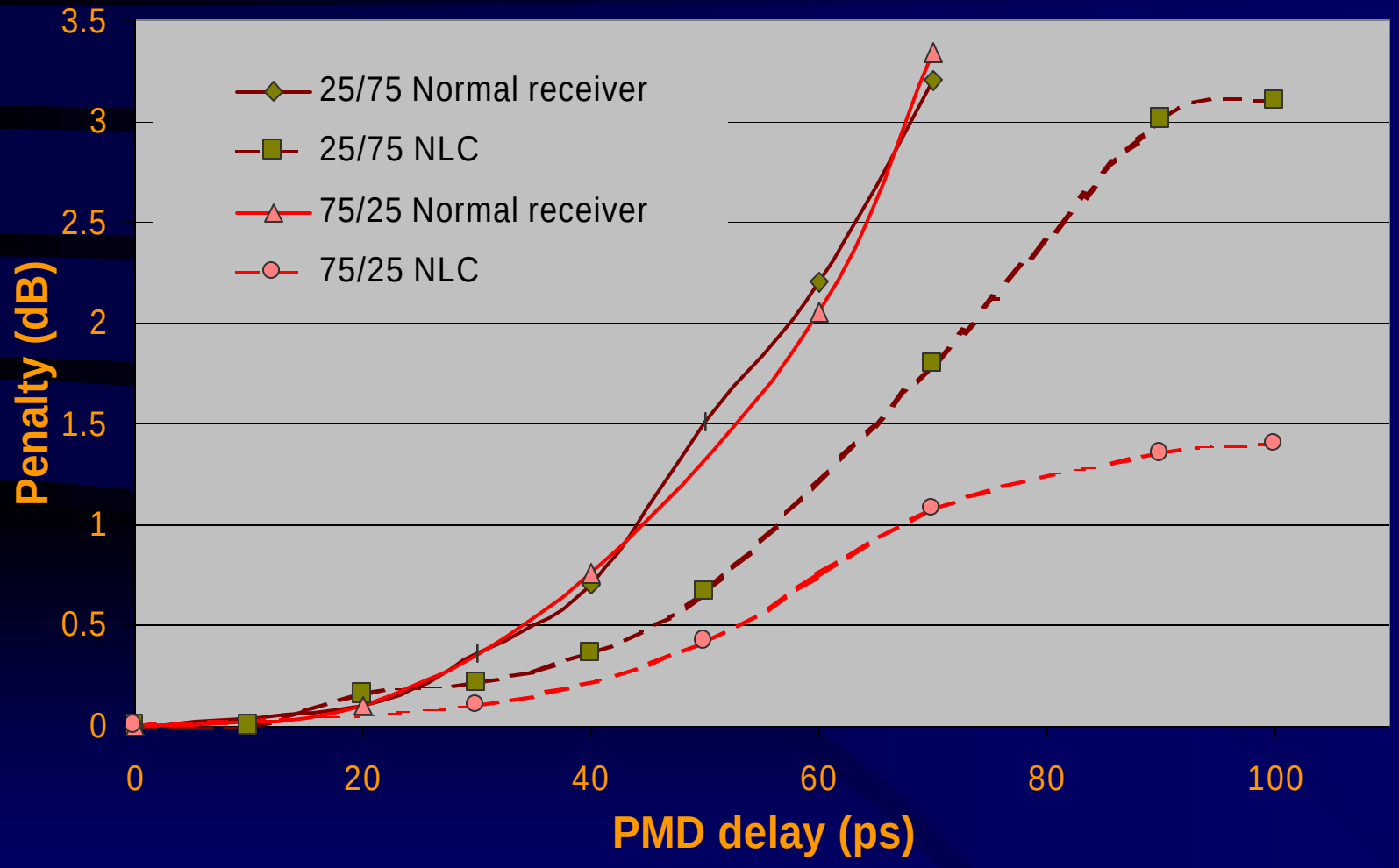

Summary

- In the thermal noise limit:
  - The NLC has a maximum 5 dB penalty for first order PMD
  - The Compound NLC+FFE has a maximum 4 dB penalty
  - The 1 dB penalty point is pushed from DGD of 50 ps to 65 and 70 ps
- These penalties will replace ISI penalty of current link model, and possibly others
- Equalization techniques may be viable for DMD channels