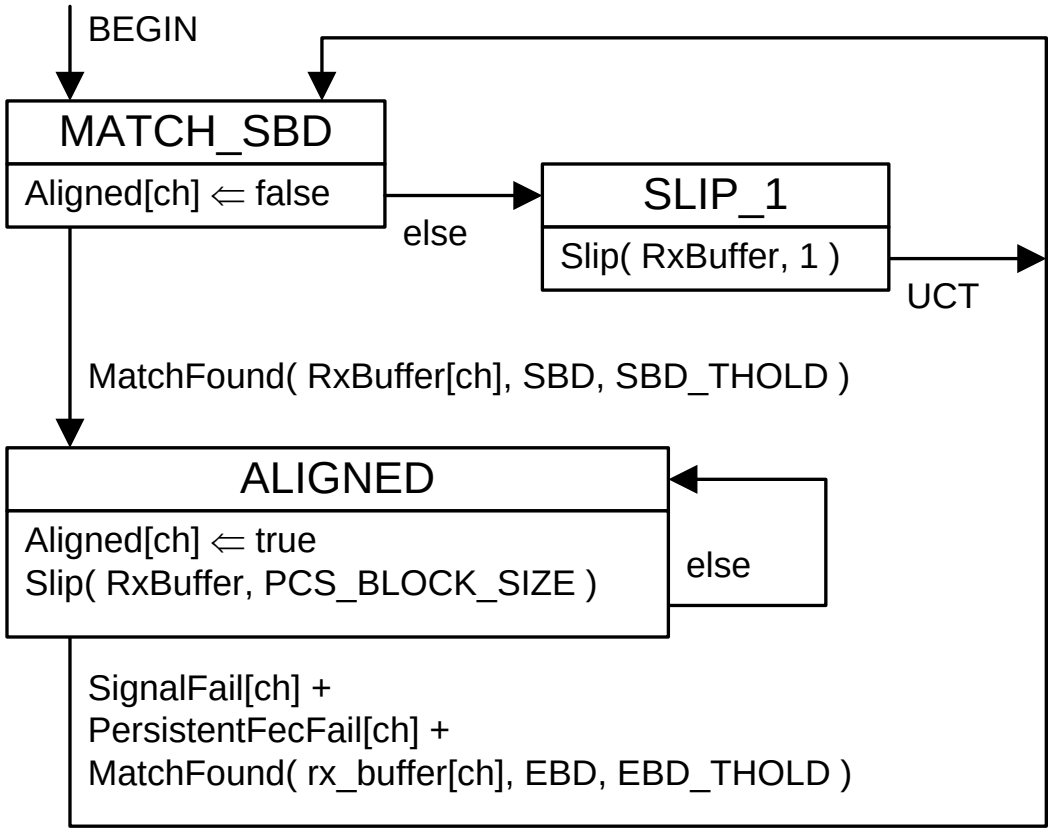
BEGIN
MATCH_SBD
Aligned[ch] ⇐ false
else
SLIP_1
Slip(RxBuffer, 1)
UCT
MatchFound(RxBuffer[ch], SBD, SBD_THOLD)
ALIGNED
Aligned[ch] ⇐ true
Slip(RxBuffer, PCS_BLOCK_SIZE)
else
SignalFail[ch] +
PersistentFecFail[ch] +
MatchFound(rx_buffer[ch], EBD, EBD_THOLD)