Broad Market Potential & Economic Feasibility: 100G Single λ PAM4 500m

IEEE 802.3cd Task Force, Sept 12 – 16 2016, Ft. Worth

Authors

- Justin Abbott, Lumentum
- Ray Nering, Cisco
- Alan Weckel, Dell’Oro Group
- Kohichi Tamura, Oclaro

Supporters

- TBA

Outline

1. Broad market potential
   - Server market
   - Ethernet switching
   - Long life expectancy of 100 GbE

2. Economic feasibility
   - Relative cost comparison of 100 GbE optical modules

3. Summary and observations

Server Market — Cloud vs. Enterprise

(Included in Dell'Oro Group's Server Report)

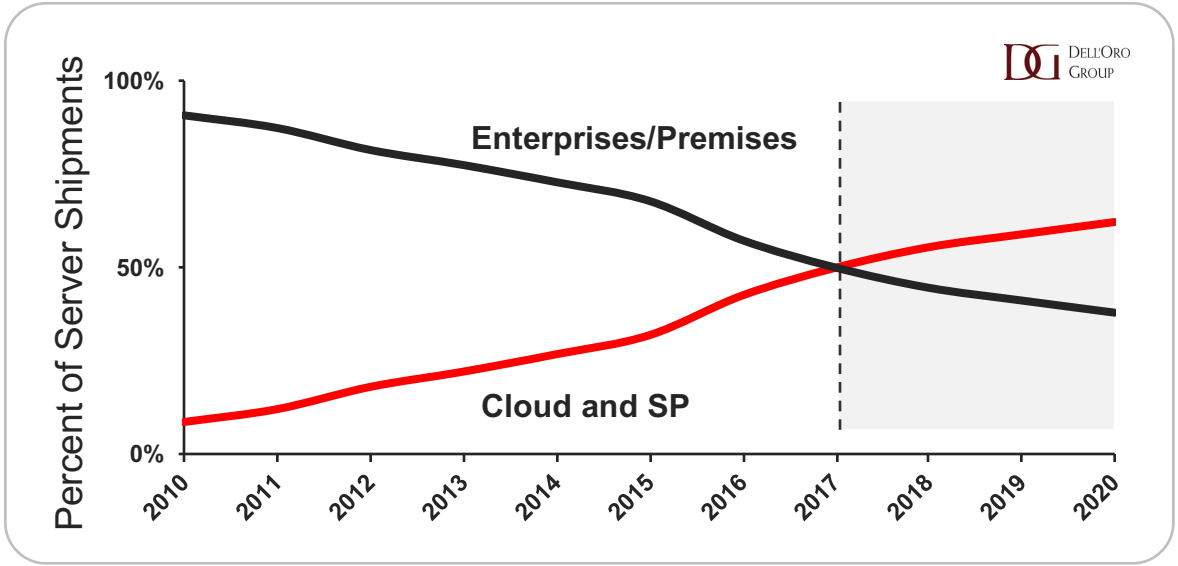

As server IO increases to 25G / 50G, **switch-to-switch interconnect** must scale up to accommodate increase in traffic

Key focus on 100G low cost & high density

Cloud switch-to-switch interconnect transitioning to >100GbE +2019

Enterprise market providing significant 100GbE switch-to-switch interconnect volume

Select Companies' Server Installed Base - End of 2015

DELL'ORO GROUP | July 2016 Forecast

Broad ecosystem of Cloud, Enterprise, and Service Providers expected to move towards 100 GbE switch-to-switch interconnect in the next five years

Ethernet Switch – Data Center Port Shipments

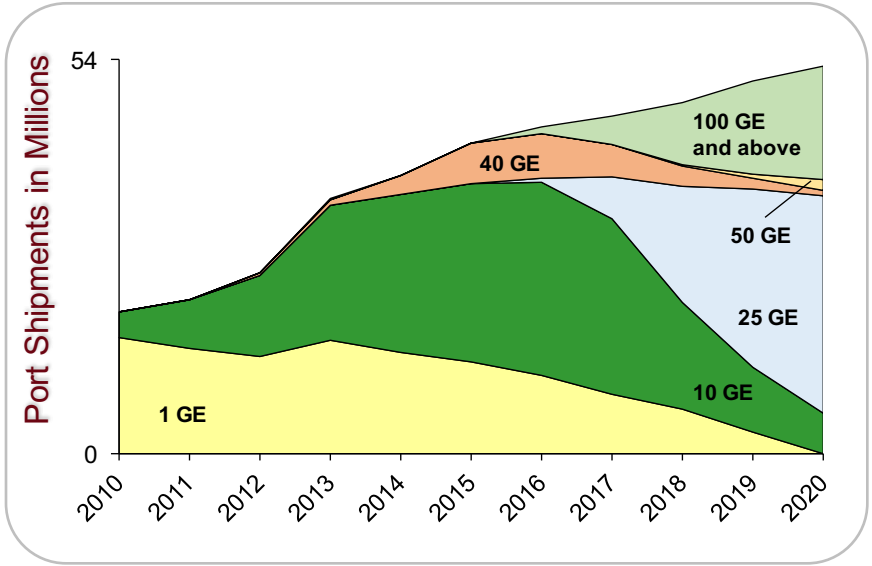

DELL'ORO GROUP | July 2016 Forecast

- Strong demand for 100G
  - > 15M ports in 2020 (copper and optical)
  - Does not include potential volume from 400G DR4 breakout
  - Combination of hyperscale and enterprise

- High volume → Low Cost Solutions
  - Aggressive 100G cost reduction is occurring now
  - Will continue as the market searches for the lowest cost solution
  - Key focus on <2km and <500m optical reaches

Merchant Silicon Influence on Switch Interconnects

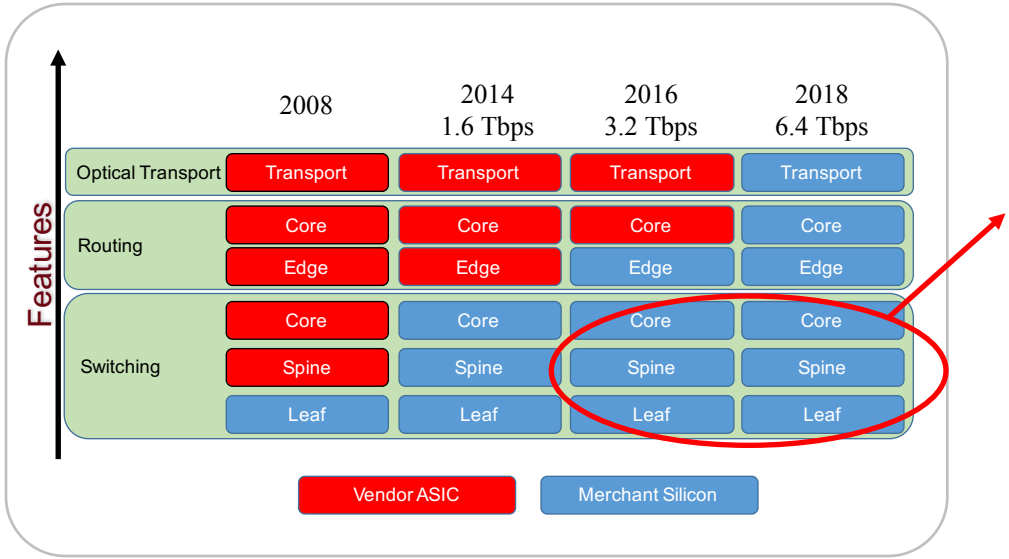

Dell'Oro Group | July 2016 Forecast

Switch ASIC's that support 100GbE

Ecosystem for supporting 100GbE switch-to-switch interconnects will continue into the next generation of ASIC's.

The number of ports used for server access is plateauing while switch-to-switch interconnects are about to expand rapidly

Broad Market Potential (1 of 2)

- **Each proposed IEEE 802 LMSC standard shall have broad market potential. At a minimum, address the following areas:**
  - **Broad sets of applicability**
  - **Multiple vendors and numerous users**

100GbE is currently being deployed and is forecasted to exceed 15M ports (copper + optical) in 2020.

As volume increases, the hyperscale and enterprise markets will drive a low cost 500m optical solution that can address server-to-switch and switch-to-switch interconnect applications.

Broad Market Potential (2 of 2)

- **Each proposed IEEE 802 LMSC standard shall have broad market potential. At a minimum, address the following areas:**
  - **Broad sets of applicability.**
  - **Multiple vendors and numerous users**

The high attendance and wide participation in P802.3cd by end users, equipment manufactures, and component suppliers demonstrates that there will be multiple vendors and users.

Economic Feasibility - Relative Cost Comparisons 100Gbps\λ vs. 50 Gbps\λ

Cost Comparison

	Module Cost	Cost/Gbps (Normalized)
100G-PSM4: 1λx4x25GBD-NRZ	1	1
400G-PSM4: 1λx4x50GBD-PAM4	1.3 – 1.6	0.3 - 0.4
400G-PSM4: 2λx8x25GBD-PAM4	3 – 3.6	0.8 – 0.9
400G-PSM4: 2λx8x50GBD-NRZ	3 – 3.6	0.8 – 0.9
400G-FR4: 4λx4x50GBD-PAM4	4.6 – 5.7	1.1 – 1.4
400G-FR8: 8λx8x25GBD-PAM4	10 - 12.9	2.5 – 3.2
400G-FR8: 8λx8x50GBD-NRZ	10 - 12.9	2.5 – 3.2

100 Gbps per lane solutions close to 1/3rd the cost of 50 Gbps per lane solutions

IEEE 802.3bs Task Force January 2015 LUXTERA 13

Reference: welch_3bs_02a_0115.pdf

Note:

- welch_3bs_02a_0115.pdf analysis completed on higher density 400G modules

Economic Feasibility - 100GbE Duplex SMF Optical Module Comparison

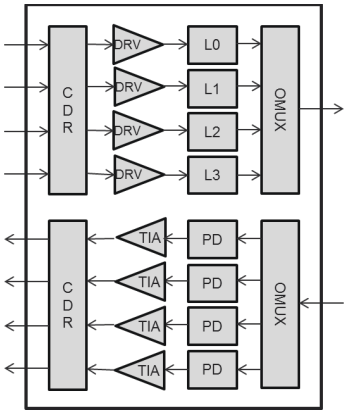

4λ (e.g. 100G-CWDM4)

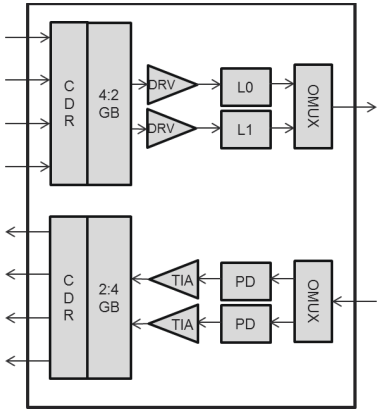

2λ (e.g. 100G-CWDM2)

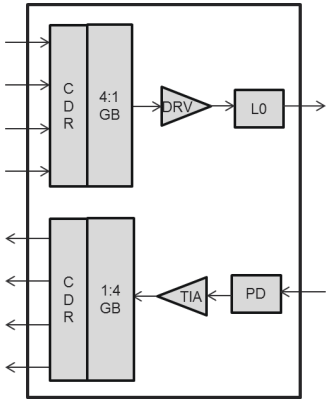

1λ (e.g. Single lambda 100G-PAM4)

"Component" Count

	4λ	2λ	1λ
CDR	2	2	2
Gear box (GB)	0	2	2
Driver	4	2	1
TIA	4	2	1
TOSA	4	2	1
ROSA	4	2	1
OMUX	2	2	0
TOTAL	20	14	8

1. Components counted by function.
2. In actual implementations, some components may be combined in a single physical entity.

Economic Feasibility - Relative Cost Comparisons (4λ vs 1λ)

- Optics
  - > 50% of the 4λ optical module cost is due to the optics
  - Significant savings are realized in moving from 4λ to 1λ
    - Assembly, test, alignment, yield
- IC's
  - Relative cost remains nearly constant in moving from 4λ to 1λ
  - Advanced nodes require significant initial investment, but can be amortized over the high volume 100G market
- PCBA & Mechanicals
  - Relative cost remains nearly constant in moving from 4λ to 1λ

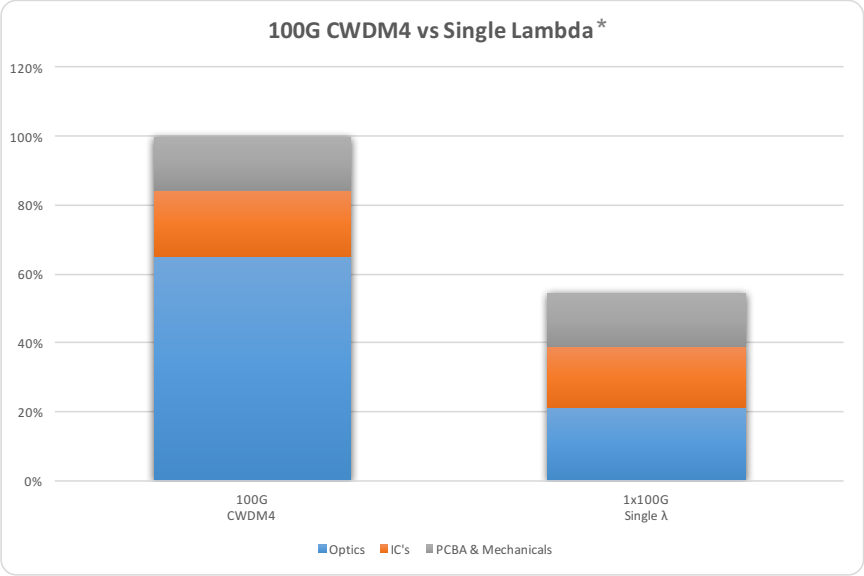

* Based on Lumentum data

Note
- CY2019 Relative Cost
- 4λ assumes CWDM4 implementation
- Comparison is at similar volumes

Transition from 4λ to 1λ results in relative cost reduction > 40%

Summary and Observations

- 100G market is growing and forecasted to exceed 15M ports in 2020 (optical and copper)
- Broad market potential highlighted
  - Consisting of Cloud, Enterprise, and Service Providers
- Relative cost data presented to demonstrate savings that can be realized in moving from a 4λ optical module to a 1λ optical module
- Single lambda 100G PAM4 well positioned to address the low cost needs of <u>500m optical interconnect</u>