Seamless Redundancy in IEC/IEEE 60802 Configuration Domains

Ring-and-spur FRER usage model for industrial automation

2026-11-19

Günter Steindl (Siemens AG)

Automation cells form Configuration Domains

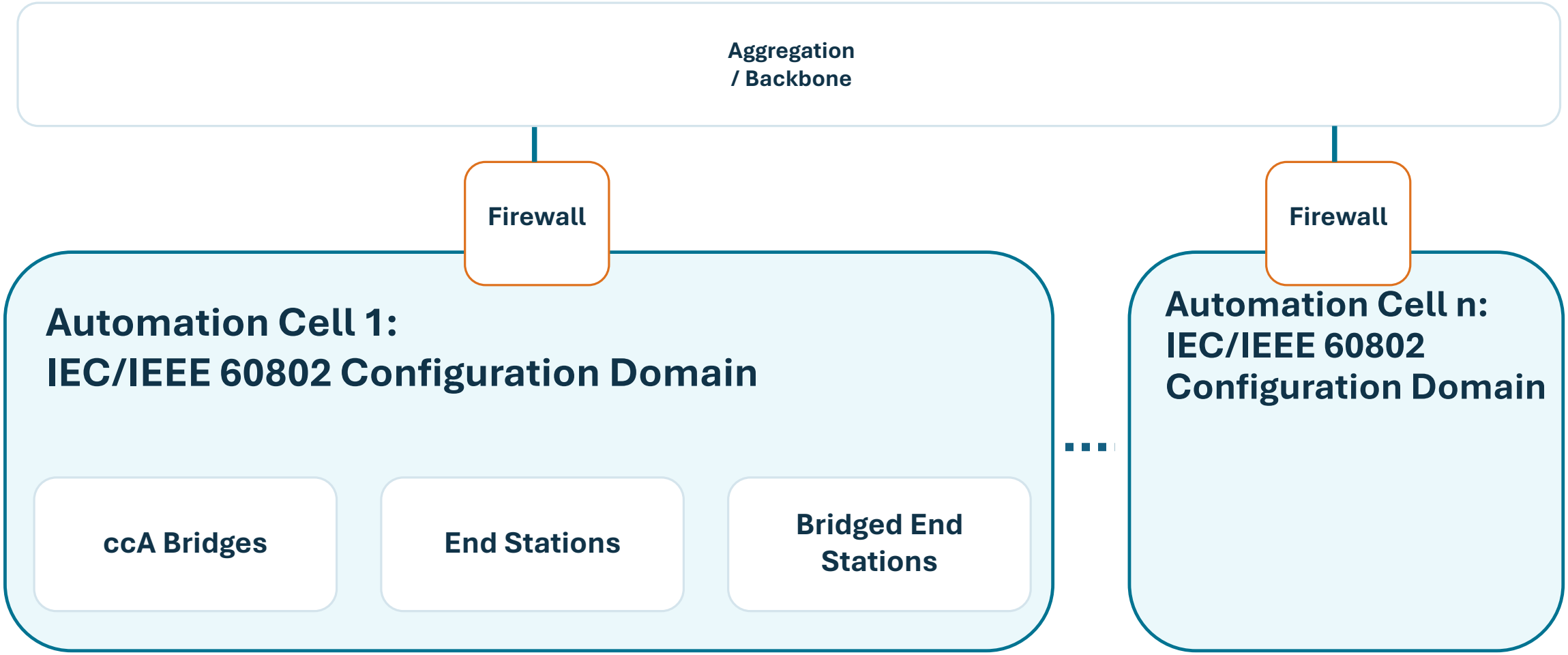

Protect application traffic without special end stations

Protocol-independent protection

Unicast, unknown unicast, multicast, and broadcast.

Bridge-side FRER can serve FRER-unaware stations.

Concurrent network operation

gPTP and LLDP remain port-local.

MACsec protects eligible links. Forwarding remains an 802.1Q responsibility.

Protection applies to eligible data traffic within the stated fault scope.

Bridged end stations make rings economical

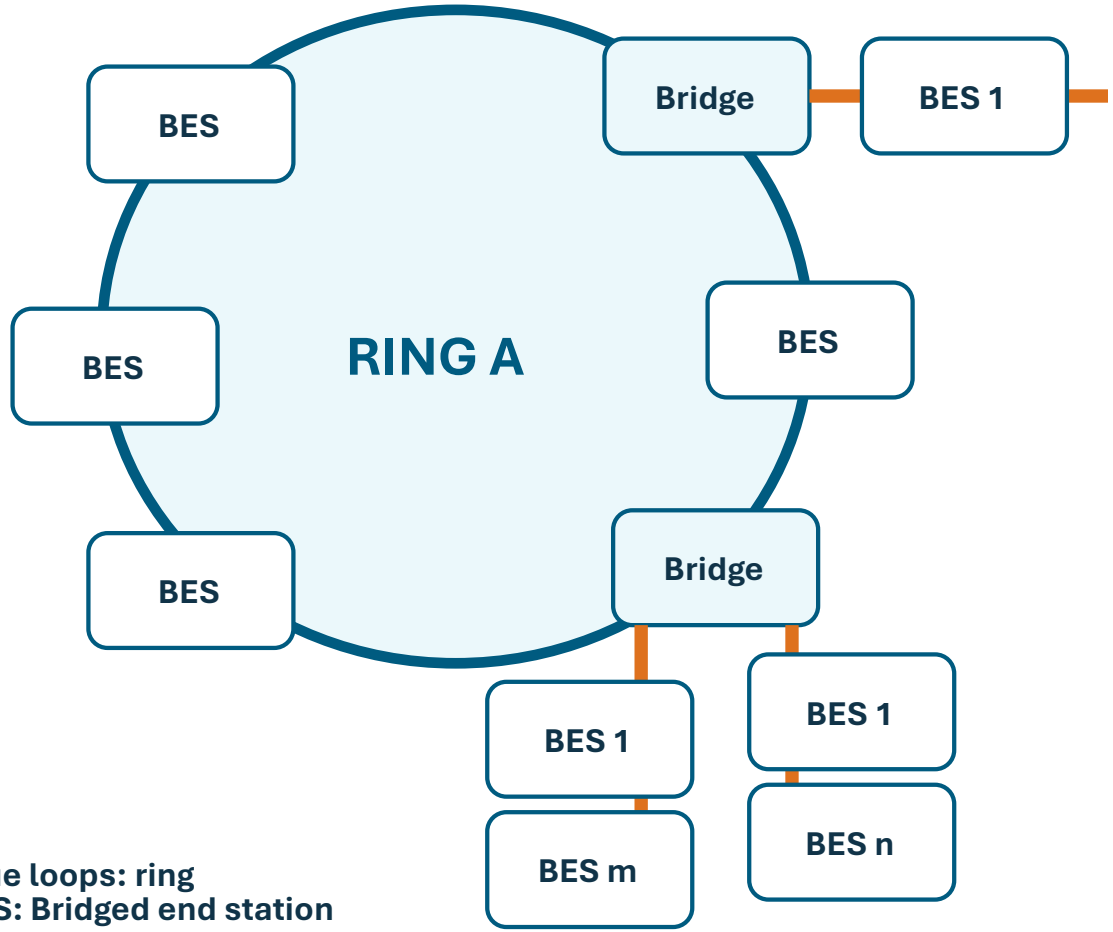

Blue loops: ring
BES: Bridged end station
Orange: spurs

Integrated bridges can replace separate switches.

Rings use short links between neighboring stations.

Spurs attach stations without a second complete network.

Connect rings only as redundancy needs require

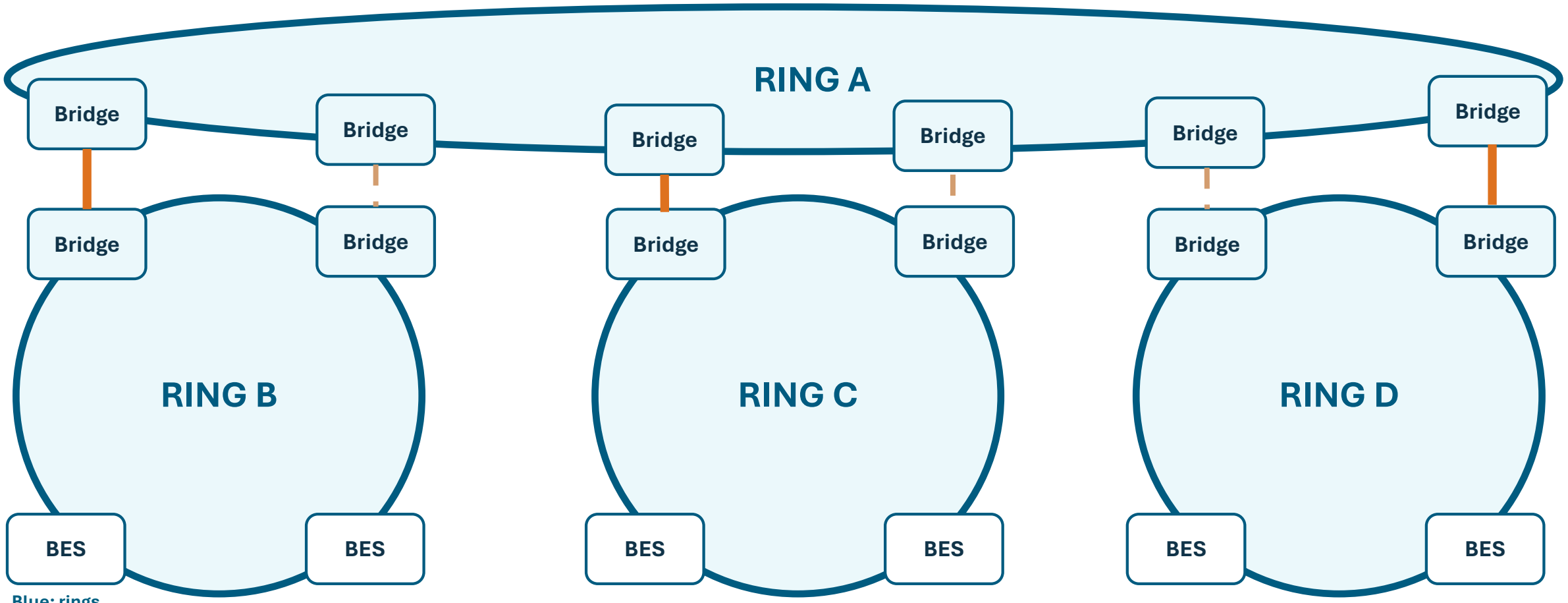

Blue: rings
Orange: inter-ring links
Dashed: second coupling

Industrial use-case targets can be large

1,000

Stations in one Configuration Domain

50

Stations in one ring

64

Hop target imposed by synchronization

128

Stations connected to a ring bridge's spurs

A controller may receive from 999 other stations. One station may use multiple sequence contexts. Joint workload: ASK 7.

Controller-side recovery is a convergence point

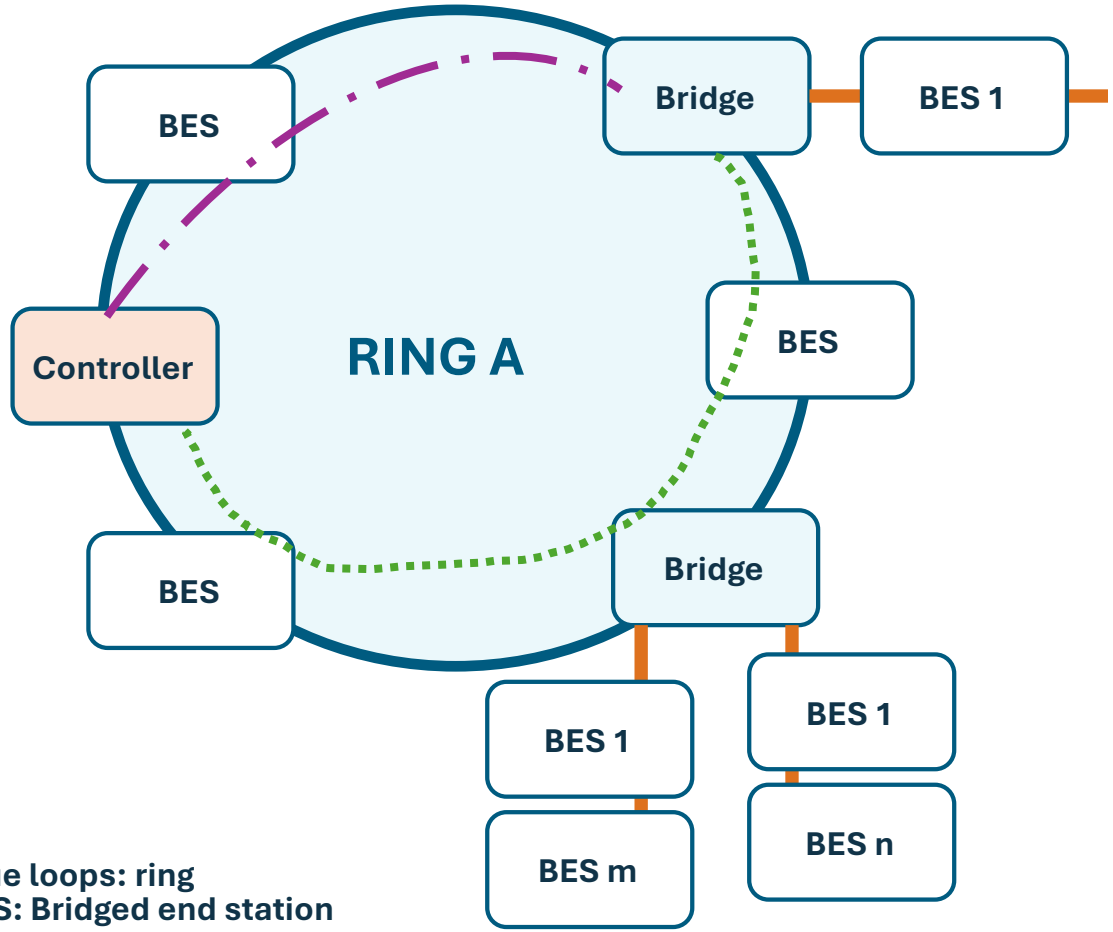

Blue loops: ring
BES: Bridged end station
Orange: spurs

Support a differential arrival time of at least 4 ms.

Maximum supported differential arrival time D: TBD, with D at least 4 ms.

Use ASK 7's joint workload for 999 other stations and additional eligible traffic.

A cost-effective FRER mode for industrial networks

Reuse the plant topology

Integrated bridges and short ring links.

Spurs do not require a second complete network.

Keep stations simple

Bridge-side sequencing and recovery.

Existing stations need no FRER implementation.

Reduce engineering

Automatic source binding.

No application-specific rules or TAS schedule. Add dual coupling only where needed.

Cost rationale: fewer dedicated devices, less cabling, and less per-flow engineering.

Proposed FRER operating model

FRER configuration:
Selected ring ports carry protected data.
Selected non-ring ports use an explicitly configured mode.

Existing IEEE primitives + the requested CB extensions
No new physical port type is implied.

Internal station: FRER proxy at the bridge

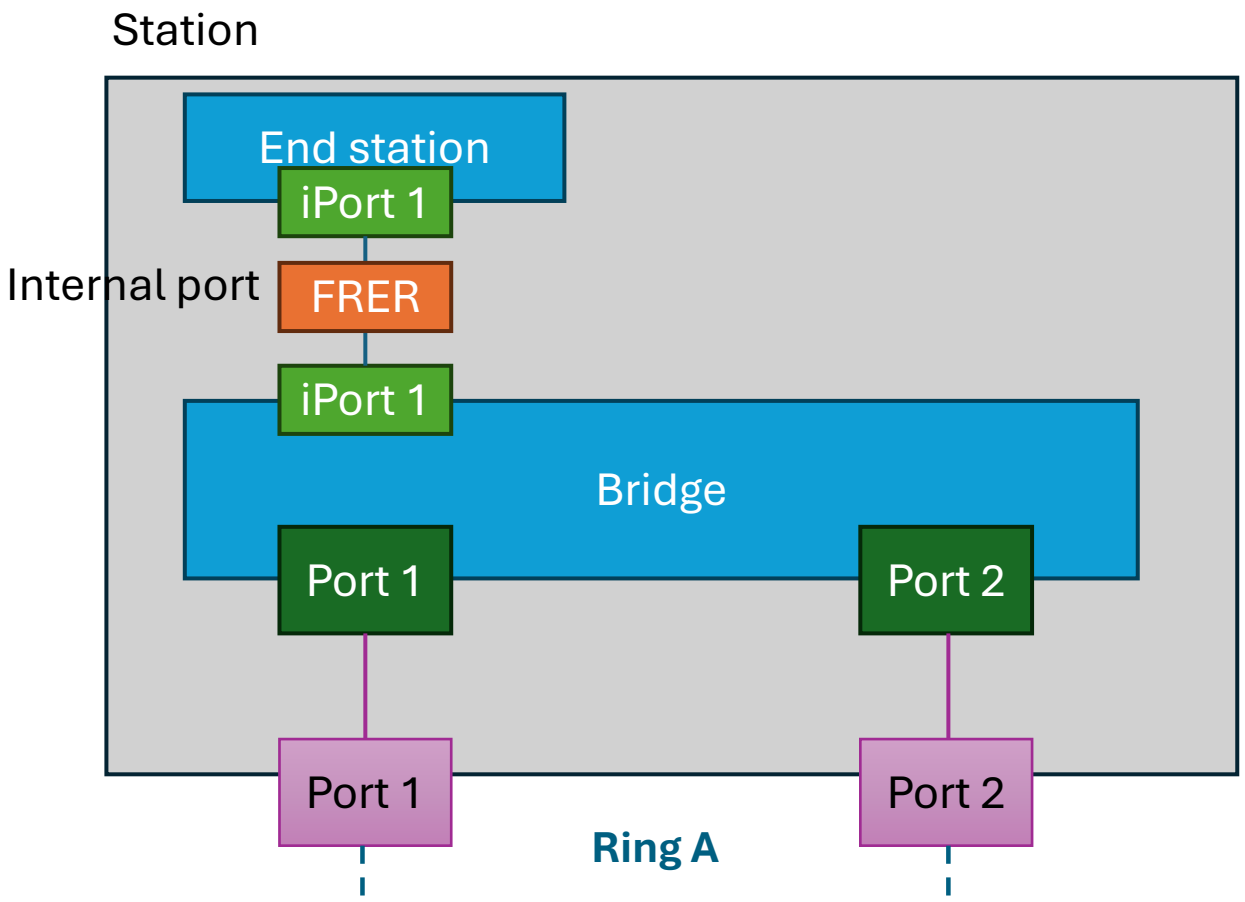

Apply the same admission principle as on a spur.

Generate only when sequence information is absent.

Recover copies before delivery to a FRER-unaware local station.

802.1Q forwards; CB supplies the FRER functions.

Spur interfaces use the same admission principle

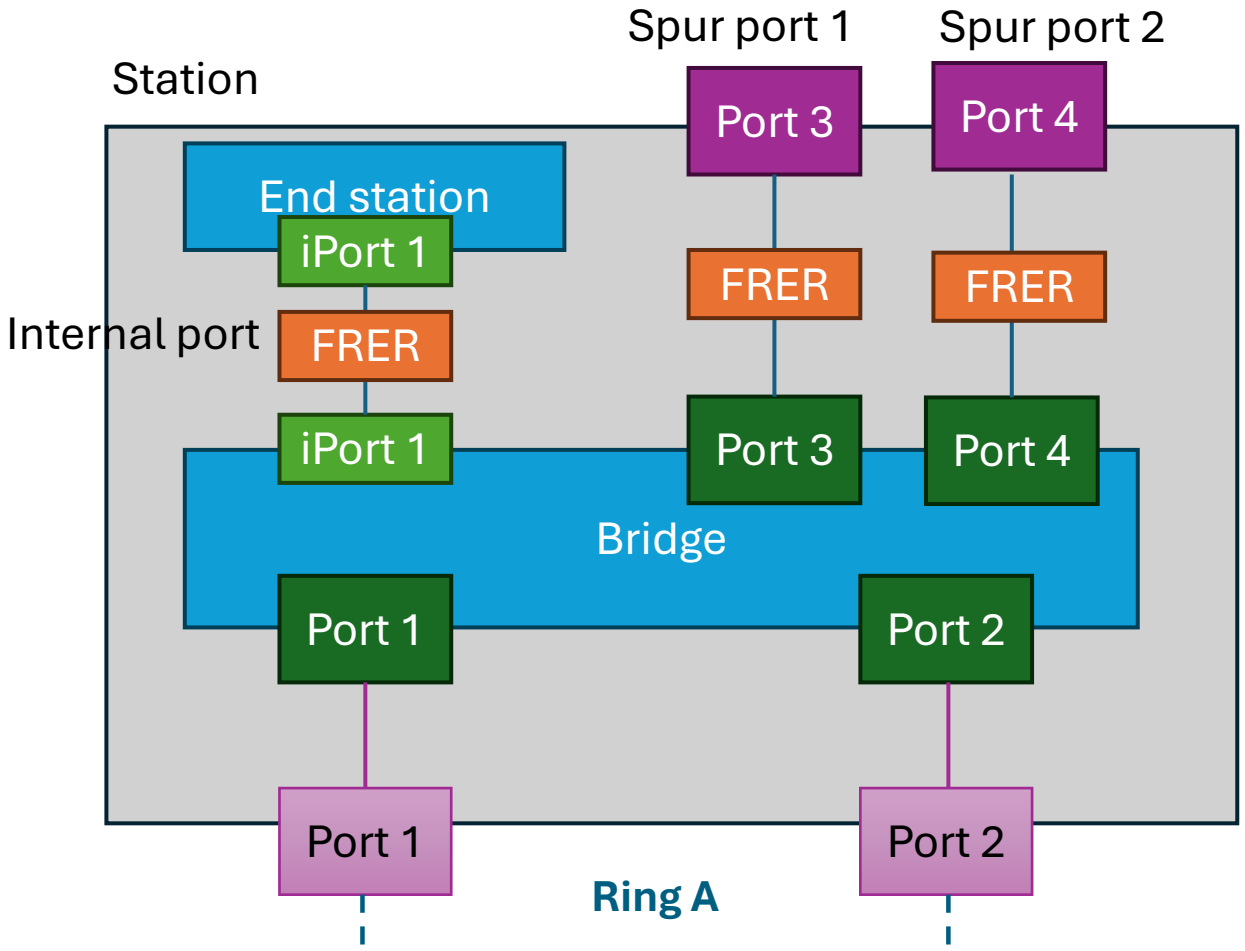

SPUR mode: add missing FRER sequencing; preserve existing sequencing.

Report the SA of every injected frame to the ring filters.

Choose REDUNDANT RING COUPLING mode for a dual inter-ring attachment.

These are configured operating modes, not new physical port types.

One inter-ring link can use SPUR mode

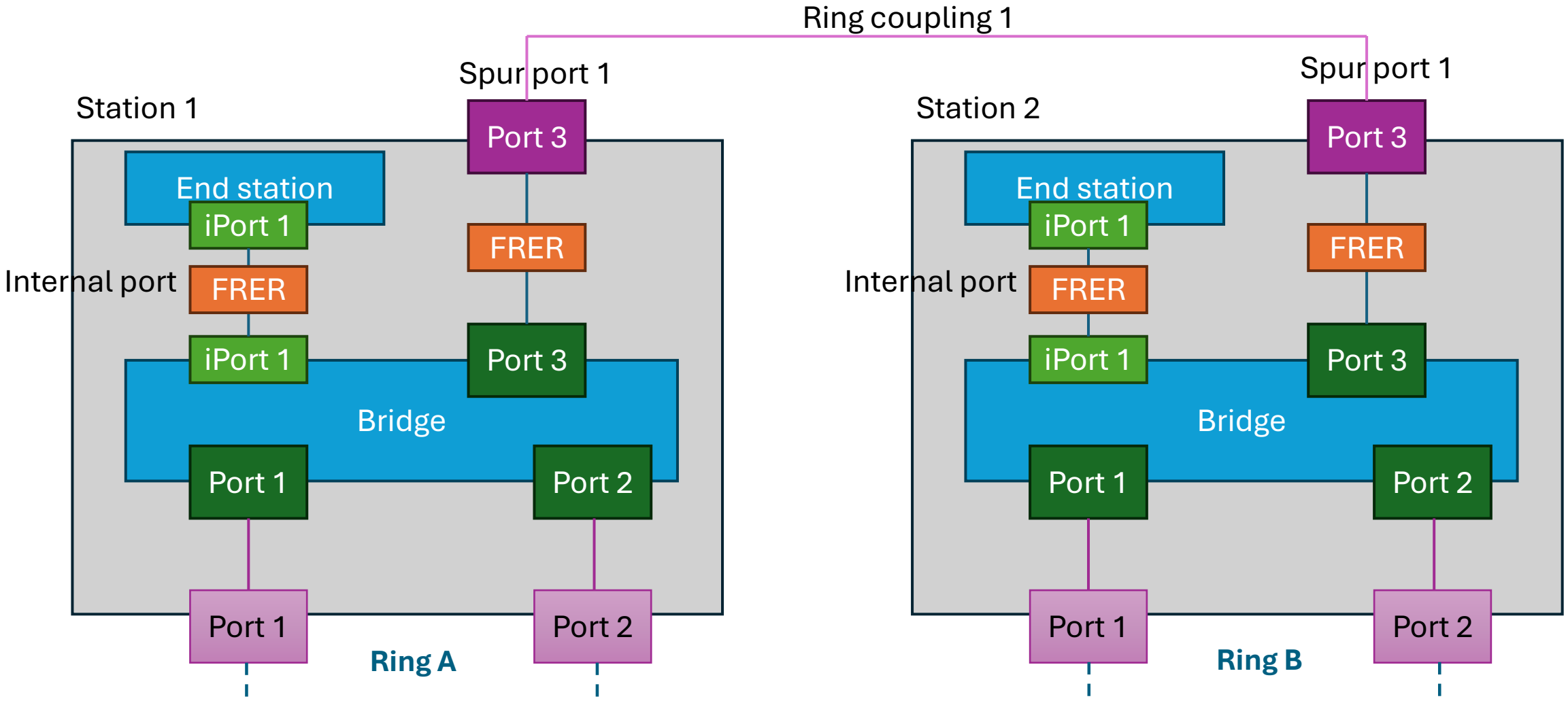

Link-redundant coupling with shared bridge endpoints

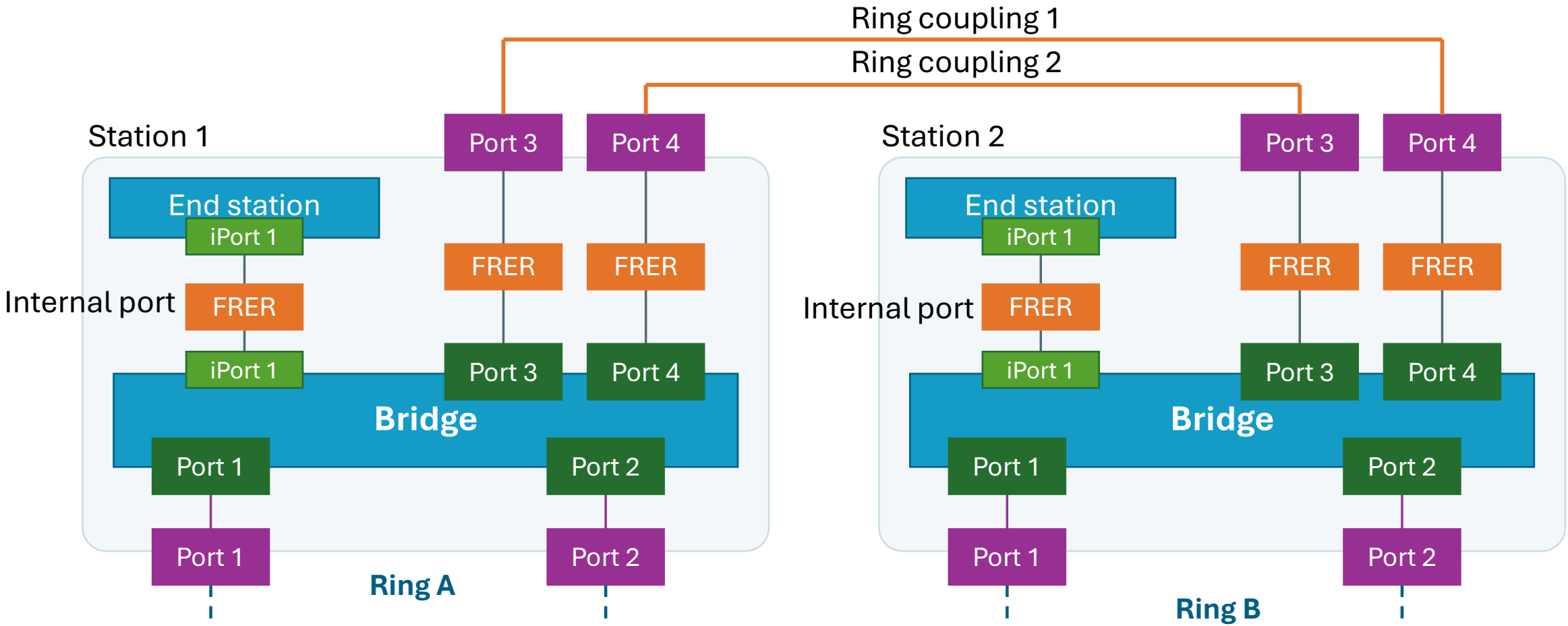

Shared Stations 1/2: link redundancy only. Node tolerance needs independent coupling Bridges (ASK 8).

Non-ring ports: from reception to ring injection

Input mode	INTERNAL / SPUR	REDUNDANT RING COUPLING
Port used	Internal End Station interface, SPUR or single-coupling port.	One of two independent inter-ring coupling ports.
Header handling	No FRER header: generate once and add one header. Valid header: forward; keep identity.	Preserve the received FRER header. No independent resequencing. Unsequenced/invalid input: TBD (ASK 3).
SA forwarding	For every injected frame, report its SA + original VLAN/context from the ingress port to both target-ring SA filters before release.	

Redundant coupling: both copies keep one original frame identity - no independent resequencing.

SA-filter model at the internal FRER interface

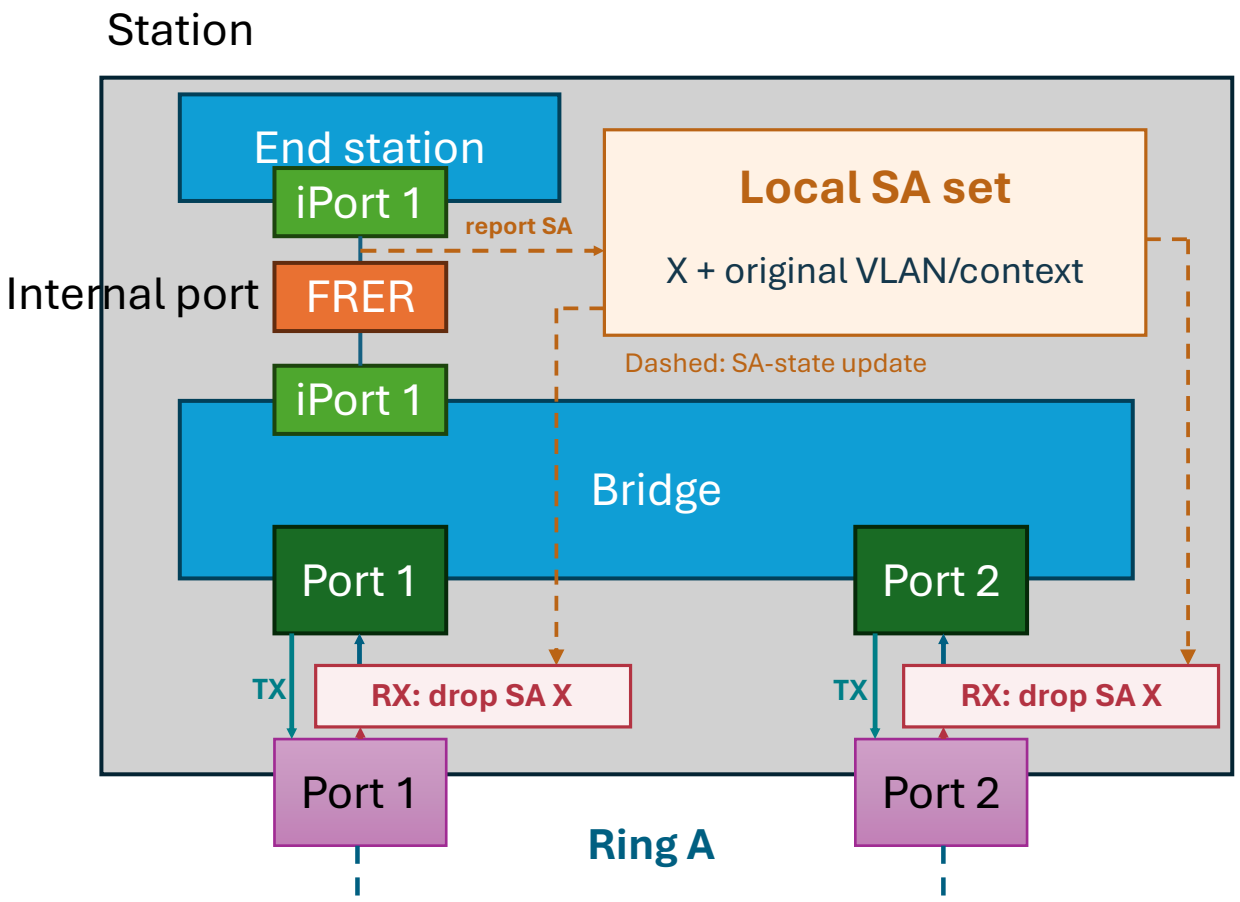

1 Proposed CB SA reporting

Forward the internal source SA and its VLAN/context to both ring-port receive filters.

2 Existing FRER / Q functions

FRER prepares sequence information. The Bridge forwards copies through both ring ports.

3 Discard only returning sources

Drop matching returns on both RXs.
Pass other sources; do not filter TX.
Do not move/refresh local SA state.

One SA-filter behavior; choose its IEEE realization

Ring RX + registered SA / original VLAN-context = discard

M1-M3: policing / gates

Existing IEEE functions:
SA classification + metering
or a permanently closed stream gate.

M4-M6: input transformation

Existing IEEE functions:
CB input transformation +
Q ingress, egress, or DA filtering.

IEEE 802.1 selects one realization, not all six.

Proposed CB extension: report each injected SA to the selected receive-side filters.

SA-filter candidates: policing and gates (M1-M3)

ID	Realization	Normative anchor
M1	Q SA classifier -> zero-bandwidth meter	Q 8.6.5.1
M2	CB SA/VLAN identity -> Q PSFP zero meter	CB 6.5; Q 8.6.5.3/.5
M3	CB identity -> permanently closed stream gate	Q 8.6.5.3 Note 2; 8.6.5.4/.10

M1/M2: CIR = EIR = 0 bit/s; CBS = EBS = 0 octets.

CIR = 0 alone is insufficient. A static stream gate is not TAS and uses no schedule.

SA-filter candidates: input translation (M4-M6)

ID	Realization	Condition
M4	Input VID_DROP -> ingress rejection	Enable ingress filtering; the ring RX port is not a member.
M5	Input VID_DROP -> no output members	Keep the VLAN's eligible egress member set empty.
M6	Input DA_DROP -> static DA filtering	Configure Filter on every potential output port.

Reserve the discard VID/DA explicitly. An unknown VLAN or DA does not guarantee discard.

CB 6.5/6.6, 8.1 h), 9.1.4; Q 8.6.2/.3/.4, 8.8.1 and 8.8.10.

Not pursued: additional SA-discard candidates

ID	Candidate	Reason not pursued
M7	Native Q VID translation -> FFF	Defined local discard, but the table is port/VID based; SA selection and service placement are additional.
M8	VID mapped to non-forwarding topology	Prove the actual forwarding state; an unknown VLAN is insufficient.
M9	Maximum-SDU threshold	Only below a proven minimum SDU size; zero disables the size filter.
M10	CB Stream Splitting with zero outputs	The function permits zero or more copies; the YANG model requires min-elements 1: unresolved.

Continue selection with M1-M6 only. M7-M10 are not pursued in this proposal.

Selection criterion: discard and learning must agree

Candidates	Discard stage	Learning / placement consequence
M1-M3	Q meter or static stream gate (8.6.5).	Learning may already have occurred; prevent return-based relearning.
M4	Input VID change -> Q ingress membership rejection (8.6.2).	A failed ingress check can suppress normal source learning (8.6.1).
M5 / M6	Input VID / DA change -> egress or static FDB filtering.	Check ingress and learning separately; later discard alone is insufficient.

M4-M6 need input rewriting before Q filtering; an output-only rewrite is not equivalent.

CB 8.1 h)/j), Figure 8-2; Q 8.6.1-.5 and 8.7. This is a selection check, not another required function.

ASK 1 | Select the SA-filter realization

OWNER	IEEE 802.1: CB / Q
REQUEST	Choose one SA-return-filter realization from M1-M6 for the proposed ring-and-spur FRER usage.
DELIVERABLE	Specify its required capabilities, processing order, and binding to the new CB SA-forwarding function.
ACCEPTANCE	Drop registered-source returns on both ring inputs; preserve legitimate injection and correct source learning.

Requested IEEE 802.1 work: select the realization and extend CB where specified.

ASK 2 | Automatic identification and first-frame protection

OWNER	802.1CB: identification and automatic initialization
REQUEST	Identify every eligible new source/context without an application or communicating-pair rule.
DELIVERABLE	Define context grouping, automatic creation and the time at which protection becomes effective.
ACCEPTANCE	A new source's first admitted frame is protected; equal DAs do not merge independent generators.

Context A:42 and context B:42 are different originals; two A:42 copies are the same original.

ASK 3 | Tag-aware admission on non-ring ports

OWNER	802.1CB: conditional sequencing and mode management
REQUEST	On internal / SPUR ingress: add sequencing when absent; preserve it when a valid FRER header is present.
DELIVERABLE	Specify supported headers, generator bypass, and handling of unsequenced or invalid frames on coupling ports.
ACCEPTANCE	No nested header or overwritten identity; mixed input is handled, and exceptional coupling input follows the defined policy.

Coupling-port admission/error policy is TBD; no silent stripping or independent resequencing is assumed.

ASK 4 | Extend CB with SA forwarding to the ring filters

OWNER	Proposed CB SA-reporting extension; existing Q functions provide discard
REQUEST	Extend CB to report SA/context for every frame injected via internal, SPUR, or redundant ring-coupling ports.
DELIVERABLE	Report on every injection; reuse existing entries. Define the interface, target filters, timing, and managed objects.
ACCEPTANCE	Both ring RX filters know the SA before release; known sources are reported too, without duplicate state.

SA forwarding transfers address metadata to the filters; it is not SA-based forwarding of the data frame.

ASK 5 | Define the lifetime of an SA-filter entry

OWNER	802.1CB / 802.1Q: SA-state lifetime and learning consistency
REQUEST	Specify entry creation and lifetime, source moves, link loss, and bridge restart.
DELIVERABLE	Separate reporting from refresh and retirement; specify which injection events renew an entry and when deletion is safe.
ACCEPTANCE	No ring return refreshes state; safe retirement prevents recirculation, and stale entries do not block moved sources.

Open: no lifetime selected. The 4 ms differential-arrival requirement is not an SA-aging value.

ASK 6 | Specify redundant ring-coupling behavior

OWNER	802.1CB with 802.1Q forwarding integration
REQUEST	Preserve original sequence identity across both couplings; use the same per-injection SA-forwarding rule.
DELIVERABLE	Define recovery/merge placement, forwarding, and loop termination with SA reporting at every injector.
ACCEPTANCE	Each surviving listener receives one logical frame after a supported coupling fault; no persistent loop.

Requested IEEE 802.1 work: select the realization and extend CB where specified.

ASK 7 | Recovery capacity and YANG visibility

OWNER 802.1CB / CBcv: recovery mechanisms and managed capabilities

REQUEST Specify one simultaneous N/H/R/B/D operating point.

Active contexts	History / context	Peak rate / context	Burst / context	Differential arrival
N = TBD	**H = TBD**	**R = TBD**	**B = TBD**	**D = TBD**
simultaneous contexts	history entries	frames/s	frames/burst	bound: at least 4 ms

DELIVERABLE Reuse CBcv YANG; expose missing joint limits, activation status, and failure diagnostics.

ACCEPTANCE Meet N/H/R/B/D together under reordering, sequence wrap/reset, and resource exhaustion.

TBD values are open requirements, not device defaults. One guaranteed combination is required.

ASK 8 | Enable the stated seamless fault protection

OWNER	802.1CB with 802.1Q forwarding / topology integration
REQUEST	Separate cases: one link OR node fault per ring, concurrently across rings; or one link OR node fault in redundant coupling.
DELIVERABLE	Specify the CB/Q composition and conformance criteria for the stated ring and coupling fault cases.
ACCEPTANCE	Seamless delivery to surviving reachable nodes; single-spur / non-redundant-coupling failures are excluded.

Coupling-node tolerance requires independent links and termination Bridges; no arbitrary combined ring/coupling failures.

IEEE references supporting the proposed mode

Reference	Use
IEEE 802.1Q-2022	Filtering, metering, learning, FDB, and VID translation.
IEEE 802.1CB-2017 + CBdb-2021	Identification, sequence functions, and Bridge placement.
IEEE 802.1CBcv-2021 / YANG	FRER objects, counters, and automatic configuration.
IEEE 802.1AC / AS / AE; 60802	Baseline service, timing, security, and industrial context.
MEF 10.3, 12.1-12.3	The zero-rate / zero-burst metering algorithm used by Q.

Detailed clauses and public source links are in the speaker notes. No new frame format is proposed.

Enable seamless redundancy for industrial networks

Cost-effective ring-and-spur FRER for dynamic industrial networks

by extending IEEE 802.1CB accordingly
or by using existing IEEE 802.1Q functions.

Questions?