802.1EH IEEE 802 Modeling

IEEE 802.1 Meeting

Paul Bottorff (HPE)

November 8, 2026

Agenda

- CSIG basic concepts (brief introduction)
- IEEE Modeling for Multi-Domain TTDF
- IEEE Modeling for Telemetry Tagging of Data Frames (TTDF)
  - Service Interface Extensions for the MAC Service Interface
  - Modeling for End Stations
  - Modeling for End Systems
  - Modeling for End Station Router interfaces
  - Modeling for MAC and C-VLAN Bridges
  - Modeling for Provider Bridges
- Thoughts on 802.1EH draft clause organization

CSIG Basic Concepts

- Telemetry is transmitted in-band in fixed size, 4 or 8 byte, L2 tags (T-TAGs, T4-TAG, T8-TAG)
- Each tag specifies a single ***signal*** parameter indicating the type of measurement to be made.
  - Only a single measurement type is made per packet
- Four signals are currently defined which are:
  - Min(ABW) Minimum Available Bandwidth
  - Min(ABW/C) Minimum Available Capacity
  - Max(Delay) Maximum node local hop Delay
  - Max(nQD) Maximum normalized Queue Depth
- Each hop along the path compares the current ***signal value*** parameter carried in the T-TAG with the value calculated for this node local hop
  - If this node local hop is more extreme (depending on min or max signal type) the ***signal value*** along with the ***locator*** carried in the tag is updated with the information from this node local hop.
- Ultra Ethernet Consortium specification subclaue 4.2: UE-Specification-1.1.pdf
- IETF individual contribution: https://www.ietf.org/archive/id/draft-ravi-ippm-csig-01.html

CSIG is a multi-layer telemetry protocol

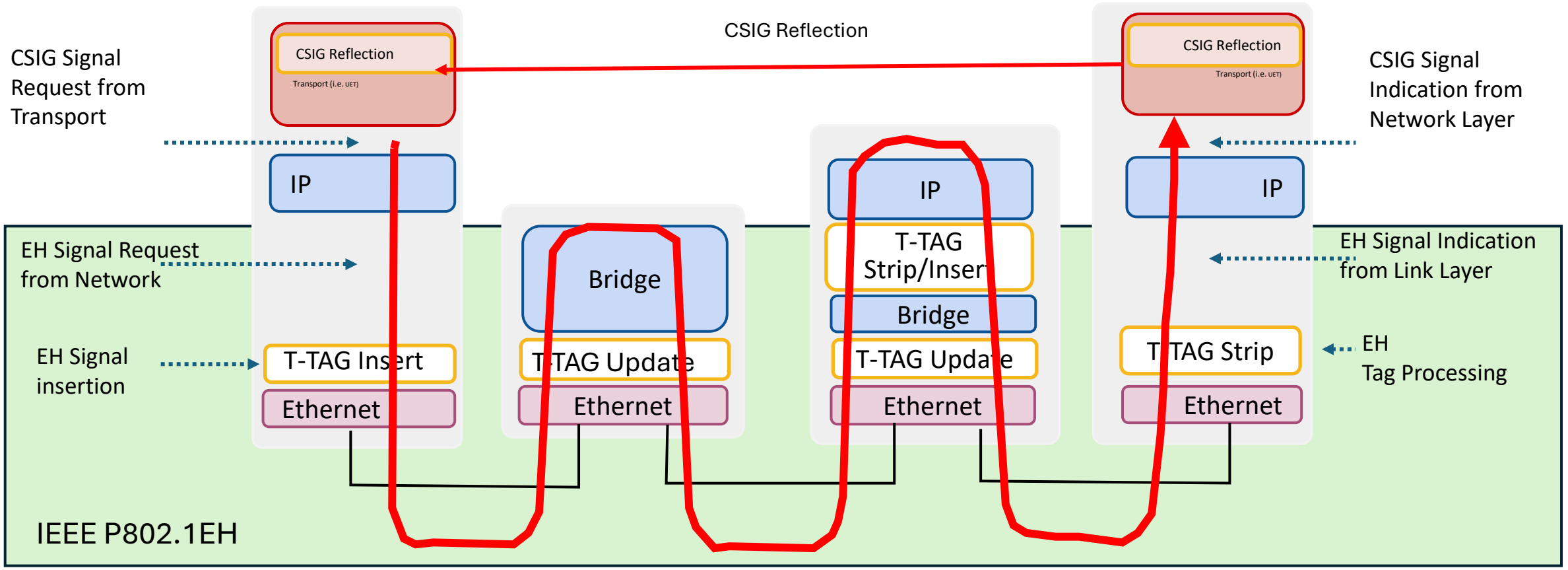

- The P802.1EH project covers the link layer operations used by CSIG and operations for telemetry tagging where no higher layer protocols are involved.
  - Higher layer protocols including reflection and congestion control are not specified by the 802.1EH standard

Telemetry Signaling Domains (DoTSigs)

- Telemetry Signaling Domain: A network area under a single administration where every station is capable of supporting Telementry Tagging of Data Frames (TTDF) with a compatible tagging format.
  - An unmodified Bridge in the domain can transparently pass telemetry tags without updating them.
    - The UEC CSIG specification requires every member of a domain to be capable of updating the telemetry.
  - Switches and routers must provide telemetry support to allow telementry information to pass transparently over their relays.
  - LLDP advertisements are specified by UEC to determine if the ends of each link are capable of manipulating compatible telemetry tags
    - If one link partner is capable, however the other is not capable, the capable partner strips the telementry tags from frames before forwarding them to the link.

A single Telemetry Signaling Domain (DoTSig) (i.e. A single data center)

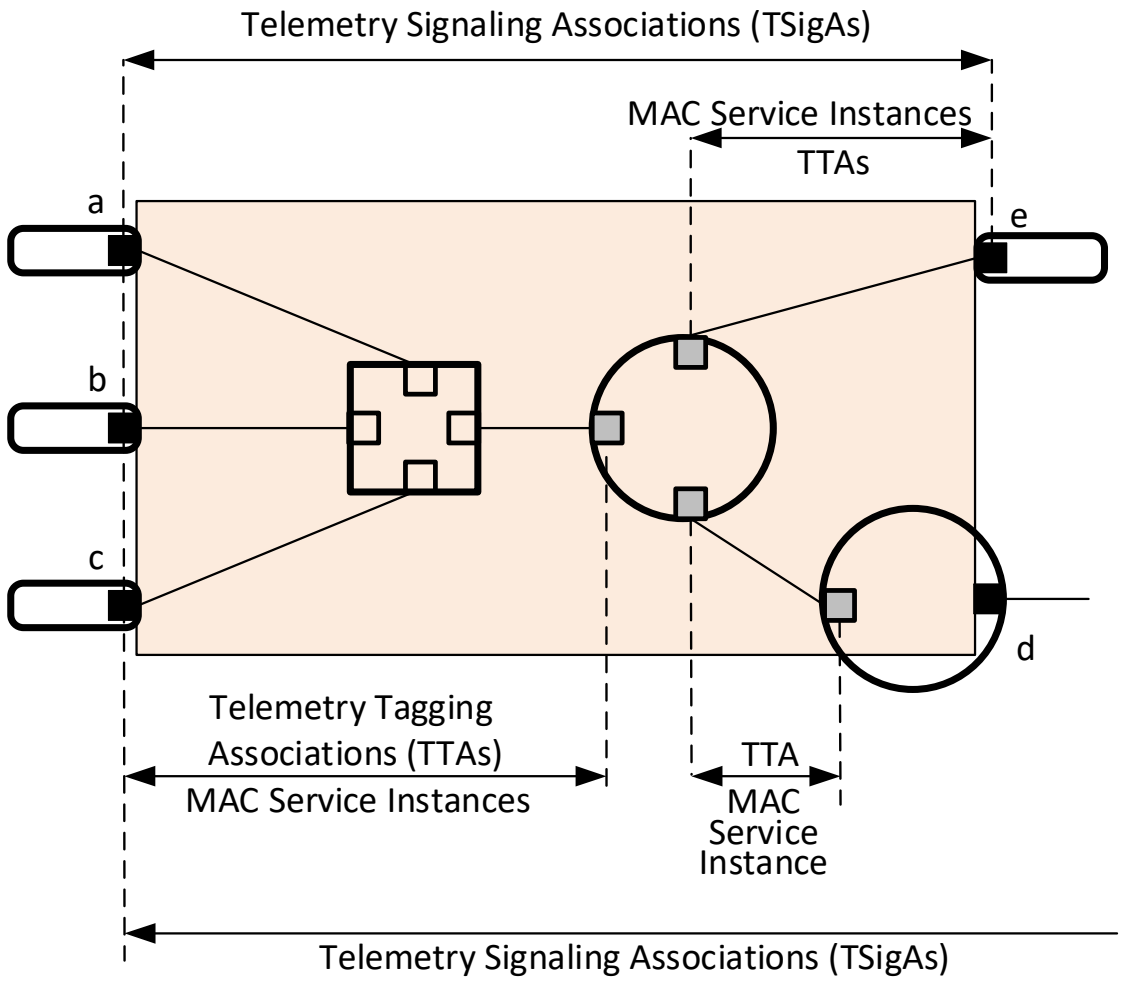

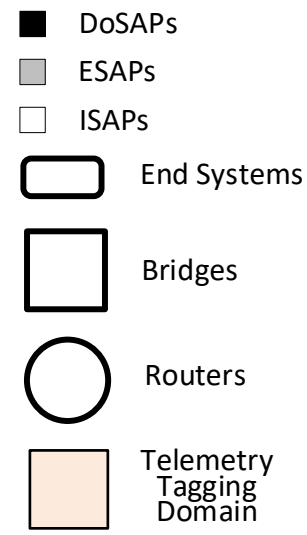

- Domain Service Access Points (DoSAPs) are the edge of the DoTSig and can be an end point of Telemetry Signaling Associations (TSigAs) or an interface to a different DoTSig.
- Here **a,b,c, and e** are end points to Telemetry Signaling Associations (TSigAs) while **d** is an interface outside the DoTSig.

Multiple Telemetry Signaling Domains (DoTSigs)

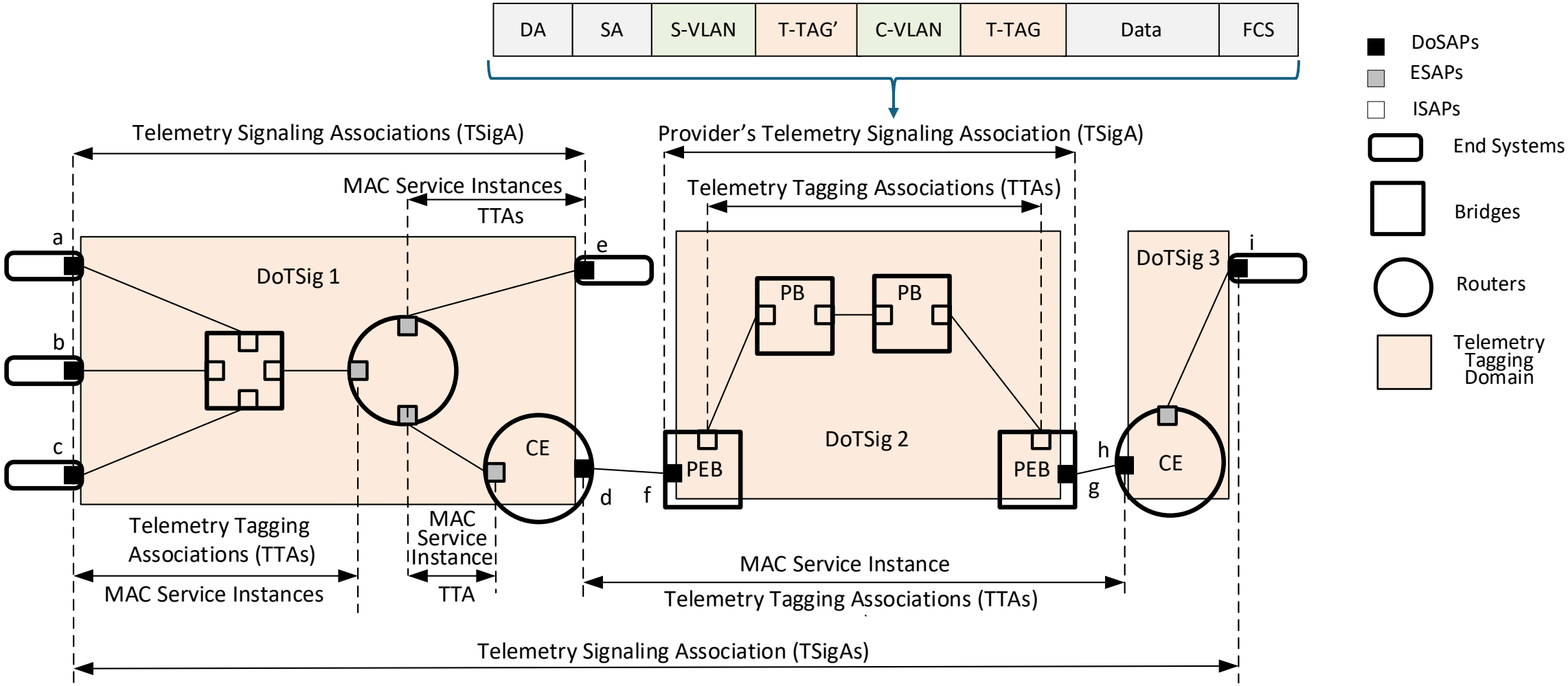

- The Provider Edge Bridges in DoTSig 2 generate a new Telementry Signaling Association internal to the provider network by inserting an additional T-TAG behind the S-VLAN tag.

Multiple Telemetry Signaling Domains (DoTSigs)

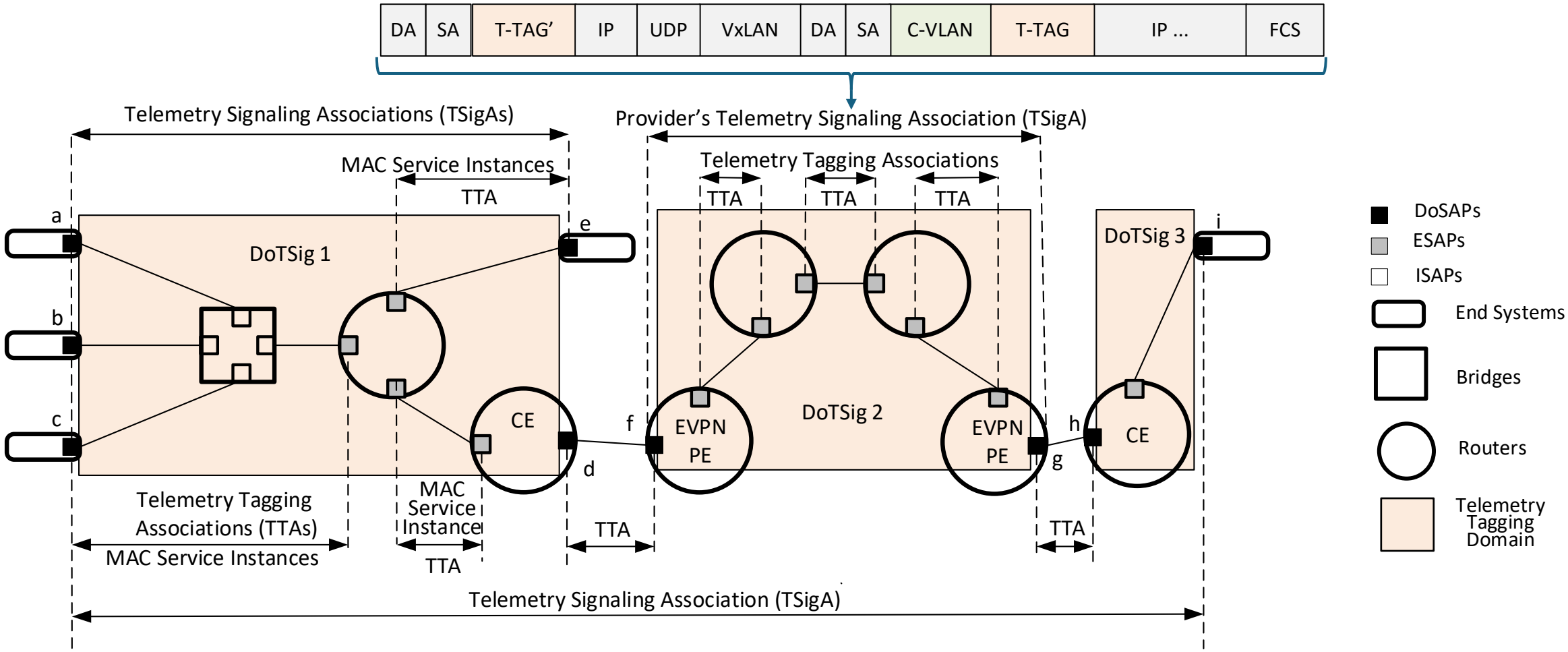

- The EVPN Provider Edge Routers in DoTSig 2 generate an encapsulation with a new outside T-TAG that collects telemetry over the Provider's TSigA

Telemetry End Points and Intermediate Points

- **DoTSig Telemetry Tagging End Point (TTEP):** A Telemetry Tagging of Data Frames (TTDF) entity associated with a Service Access Point (SAP) of a MAC Service instance which can insert and strip T-TAGs from PDUs and respond to and forward telementry over it's user service interface.
  - Note: TTEPs have two half functions one inserting T-TAGs based on service requests and the other stripping T-TAGs and indicating the telementry over the service interface.
- **DoTSig Telemetry End Point (TEP):** A TTEP entity associated with a specific Domain Service Access Point (DoSAP) of a MAC Service instance which is an end point of a Telementry Signaling Association (TSigA).
- **DoTSig Telemetry Tagging Intermediate Point (TTIP):** A Telemetry Tagging of Data Frames (TTDF) entity that can update telemetry information within T-TAGs it receives.
  - Note: TTIPs have two half functions one that receives T-TAGs from the network and forwards them along with timing information over the Bridge relay and the other that receives frames with T-TAGs from the Bridge relay and does compare and update operations on T-TAG.

Telemetry Tagging Entities

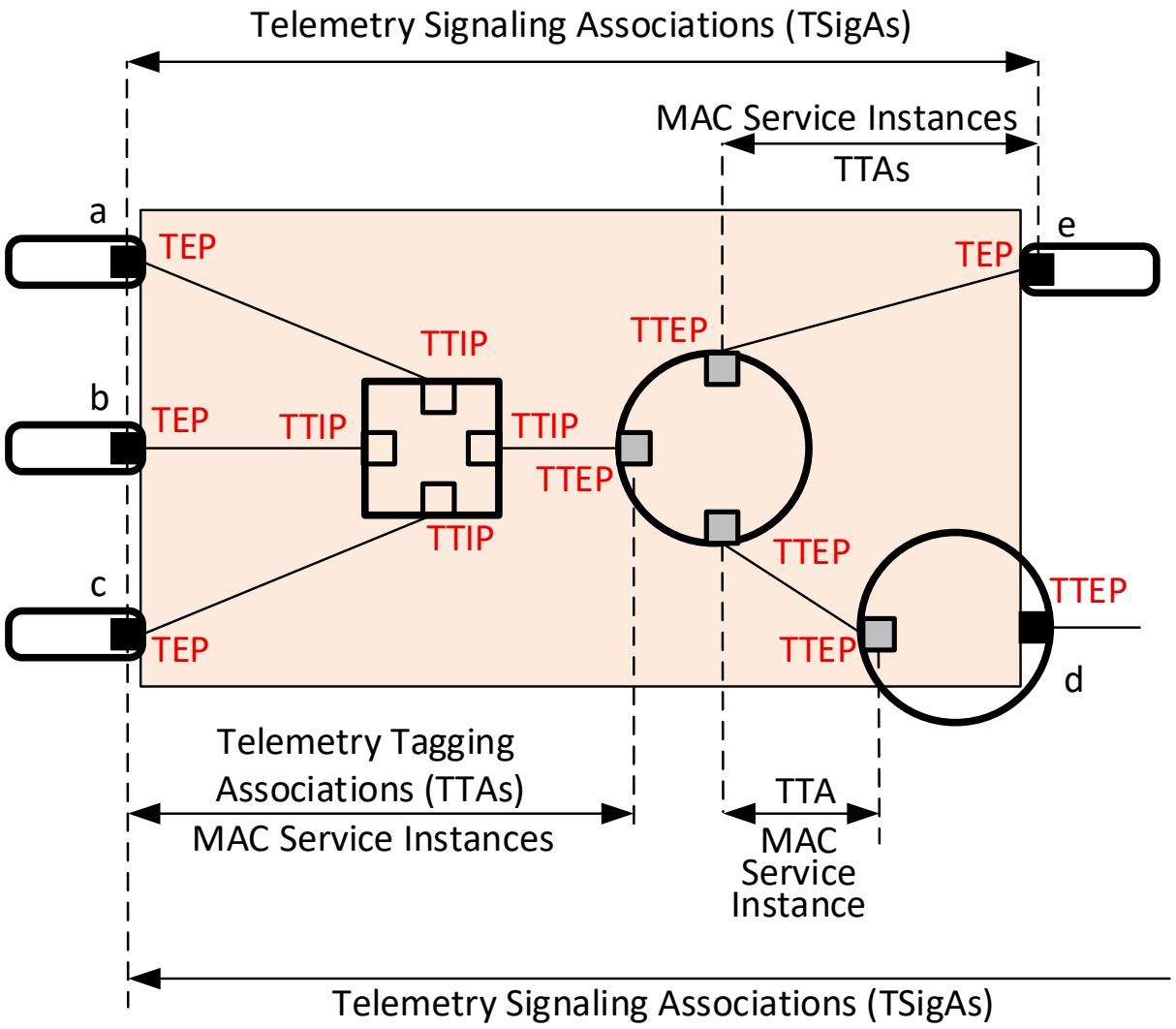

TEP Telemetry End Point

TTEP Telemetry Tagging End Point

TTIP Telemetry Tagging Intermediate Point

DoSAPs

ESAPs

ISAPs

End Systems

Bridges

Routers

Telemetry Tagging Domain

- The DoSAPs a, b, c, and e interface to Telementry End Point Entities that are end points of TSigAs that extend over the DoTSig.
- The DoSAP d extends TSigAs from this domain into an attached domain.

End Station Tag Processing

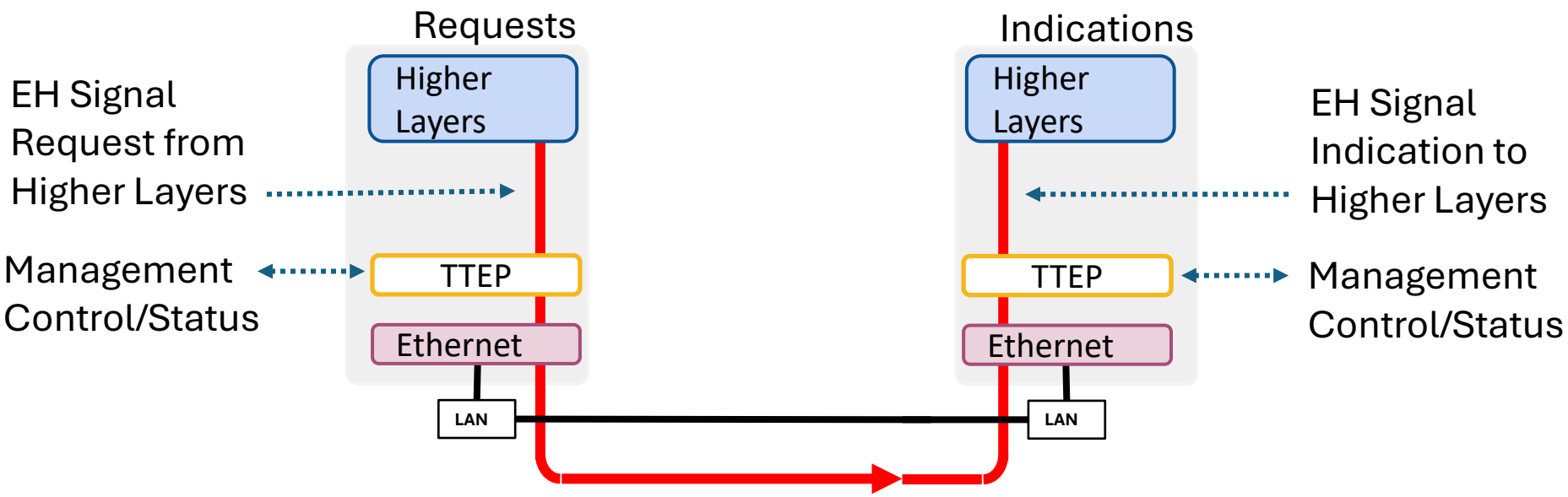

- Higher layers making use of 802.1EH signals make measurement requests in-band via their service interface to the lower layers. These requests are encoded at L2 within a EH-tag.
- Requests could also be initiated directly from L2 under control from the management module rather than the service interface.
- On receipt of the EH-tag at an L2 destination measurements are extracted from the tag and delivered with the service indication to the Higher Layers.
- Measurements could also be collected at L2 for delivery to the management interface or a collector application.

Simple Open System Interconnect (OSI) End Station Stack

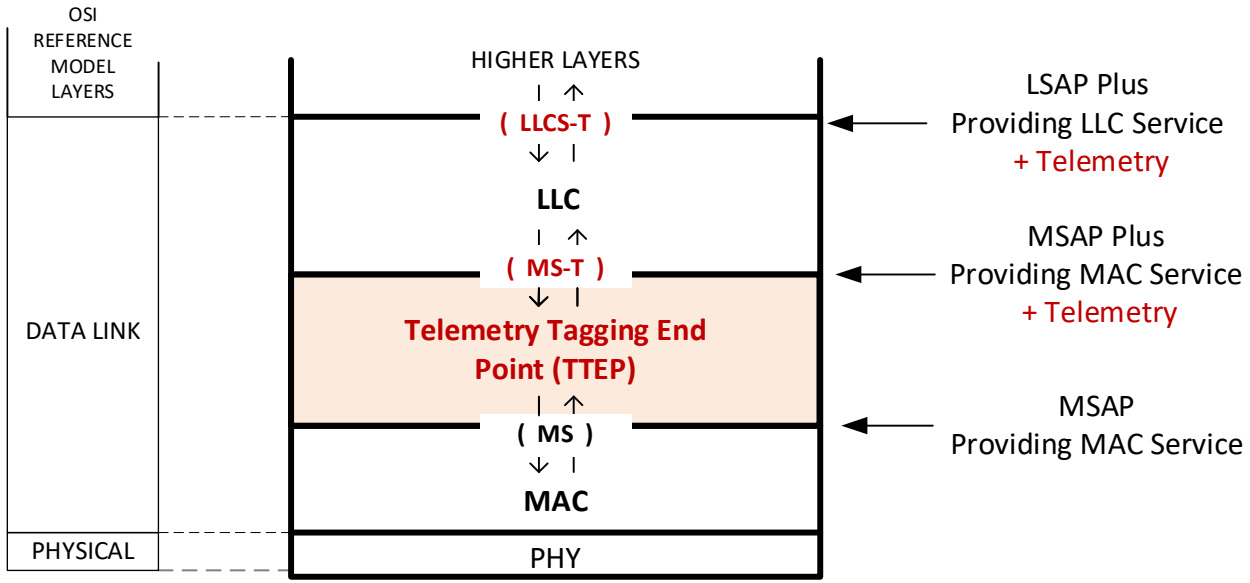

- Here the SAPs of an OSI stack have been enhanced to propagate the telemetry requests and indications from the Higher Layers to/from the Data Link.
- At the Link layer the Telemetry entity sits between the LLC and MAC entities.
- Frames are transmitted from and received by the telemetry entity using the MAC Service, however the service provided by the telemetry entity is an enhanced MAC Service including the telemetry signals.

Note: The telemetry entity is not a shim since the MS-T service interface is extended to support the telemetry signals.

MAC Service Telemetry Extension (MS-T) For End Stations

MAT_UNITDATA.indication (
destination_address,
source_address,
mac_service_data_unit,
priority,
signal_type,
signal_value,
locator_metadata,
flags
)

MAT_UNITDATA.request (
destination_address,
source_address,
mac_service_data_unit,
priority,
signal_type,
signal_value,
locator_metadata,
flags
)

MSAP Plus

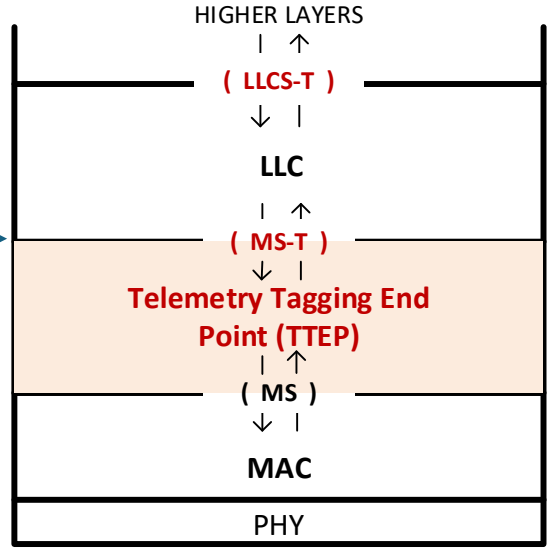

- Similar telemetry extensions are needed at LLCS

Timestamp for Node Local Hop Delay calculation

- We need a way to pass a timestamp along with each packet over the MS as well as over the ISS and EISS to allow passing the ingress timestamp to the egress.
  - At the egress the ingress timestamp is used to calculate the Node Local Hop Delay by subtracting the ingress from egress times.
- The Node Local Hop Delay is measured in nanoseconds, however the minimum precision of the measurement needs specification.
  - My strawman for hop delay time precision is 1 max sized packet time. For 100 Gbit Ethernet this would be ~121 nsec.
- The Local End System Hop Delay is not included as part of the collected telemetry.
- For router implementations the router ports, which are end stations, need to pass the timestamp along with telemetry for each packet.
  - The timestamp needs to be forwarded with the packet over the router relay to the egress router port where it will be used to calculate the Node Local Hop Delay for the router.

Timestamp for hop delay calculation

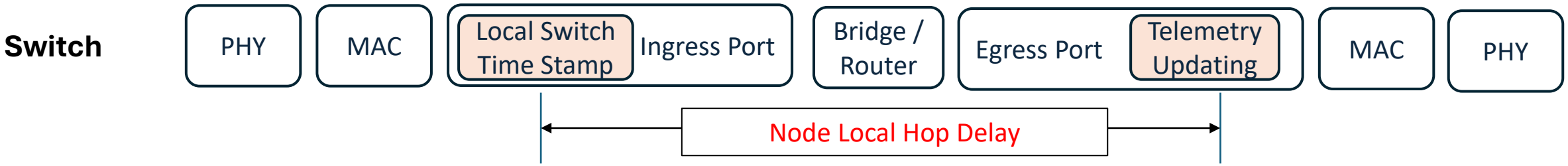

- For transit nodes a timestamp of the ingress time is needed
  - UEC liaison shows the timestamp within the ingress port before queuing
- For End Systems the NICs can use alternate methods for congestion control based on local queuing information.

MAC Service Telemetry Extension (MS-T) with timestamp

MAT_UNITDATA.indication (
destination_address,
source_address,
mac_service_data_unit,
priority,
signal_type,
signal_value,
locator_metadata,
flags,
time_stamp
)

MAT_UNITDATA.request (
destination_address,
source_address,
mac_service_data_unit,
priority,
signal_type,
signal_value,
locator_metadata,
flags,
time_stamp
)

MSAP Plus

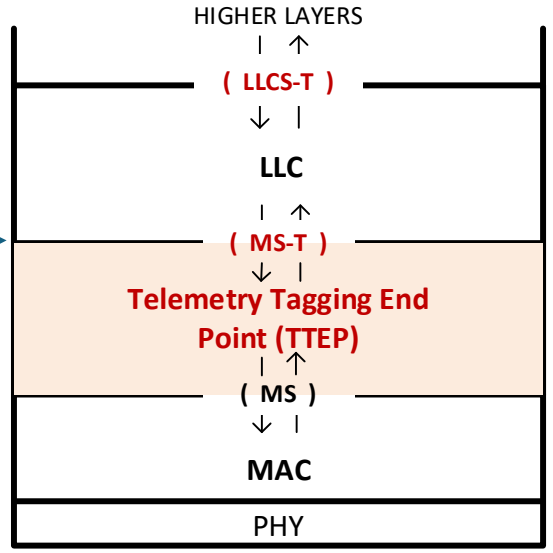

- A timestamp could be added to the extended MAC service interface (MS-T).
- A timestamp will also be needed over the ISS and EISS.
  - Could be loaded as a sub-parameter of the ISS and EISS connection_identifier

Thoughts on a Generalized MAC Service Interface Extension

EMA_UNITDATA.indication (
destination_address,
source_address,
mac_service_data_unit,
priority,
metadata
)

EMA_UNITDATA.request (
destination_address,
source_address,
mac_service_data_unit,
priority,
metadata
)

Metadata defined by P802.1EH

signal_type,
signal_value,
locator_metadata,
flags,
time_stamp

- Allows P802.1EH and P802.1EJ to identify service interface extensions separately
- The connection_identifier of the ISS and EISS could then be used in the same way
- Ideally a future amendment to 802.1AC would define the Extended MAC Service Interface

Simple End Station

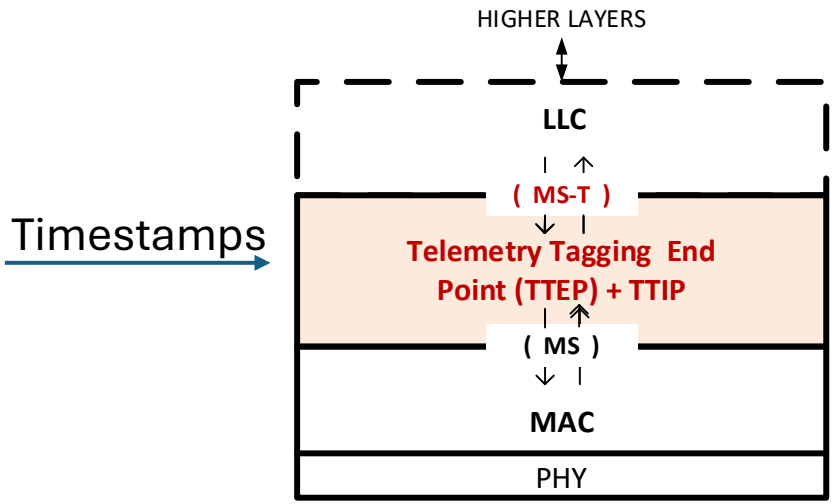

- In a simple end station the telemetry tag is inserted and telemetry extracted by a layer above the MAC Service interface.
- The telemetry layer uses the telemetry in the extended MAC Service (MS-T) requests to generate telemetry tags.
- The telemetry layer strips inbound telemetry tags and passes their telemetry data in the extended MAC Service (MS-T) indications.



Frame on wire with simple End Station

End Station with MACSec

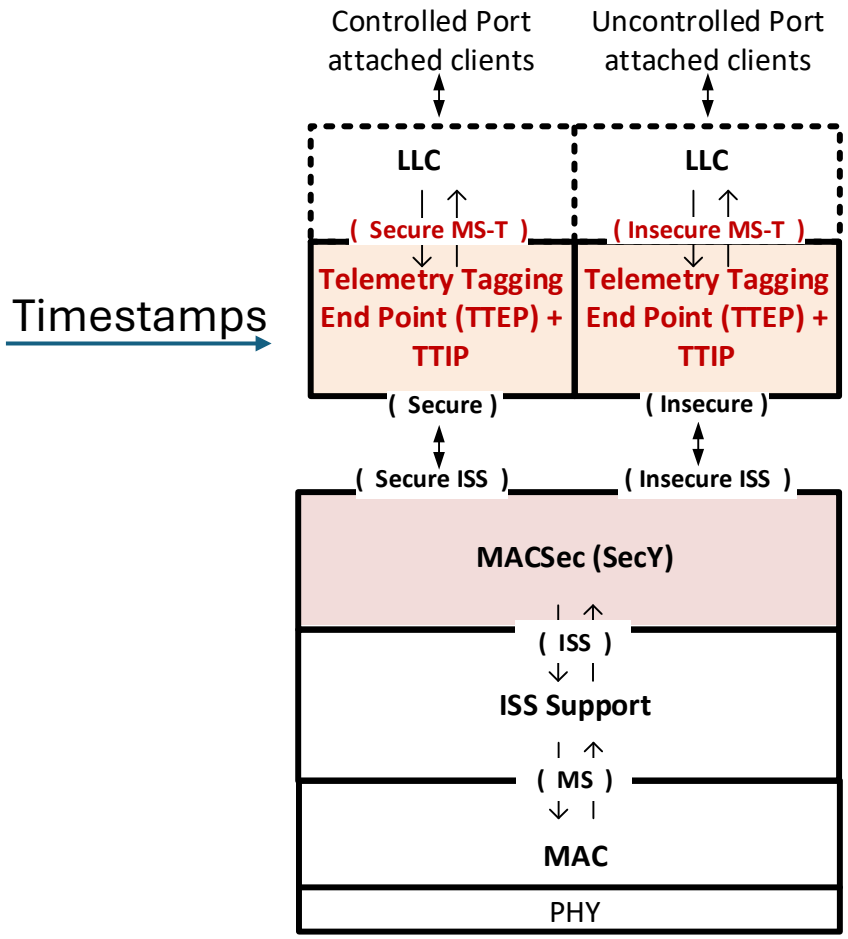

- The telemetry tag is inserted, updated, and extracted above MACSec since the telemetry operations need to be done in the clear.
- There may be other layers between MACSec and telemetry tagging.
- The telemetry tag entities interface to LLC using the extended Mac Service interface (MS-T) to pass the telemetry tag information.
- Here the timestamp is taken above MACSec so MACSec operations are not included in the hop delay.



Frame on wire with MACSec End Station

End Station with VLAN tagging

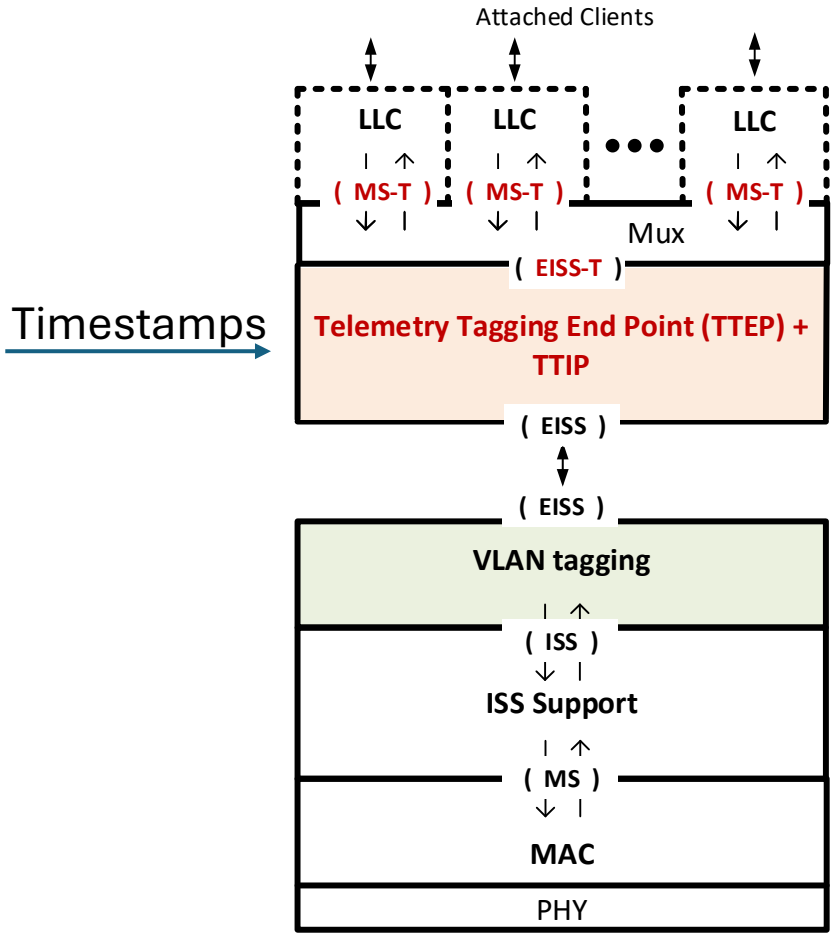

- The telemetry tag is inserted, updated, and extracted above VLAN tagging to allow it to pass transparently through downstream Bridge relays.
- There may be other layers between VLAN tagging and the telemetry tagging.
- The telemetry tag entities interface to LLC using the extended Mac Service interface (MS-T) so the telemetry tag information is passed up the stack.
- A reference point for the timestamping is needed.
  - Ideally this would be at the top of the port stack just before queuing to eliminating the port pipeline from the hop delay.

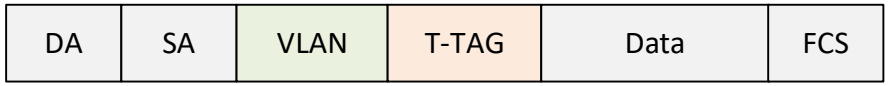

Frame on wire with VLAN aware End Station

Router End Station Configurations

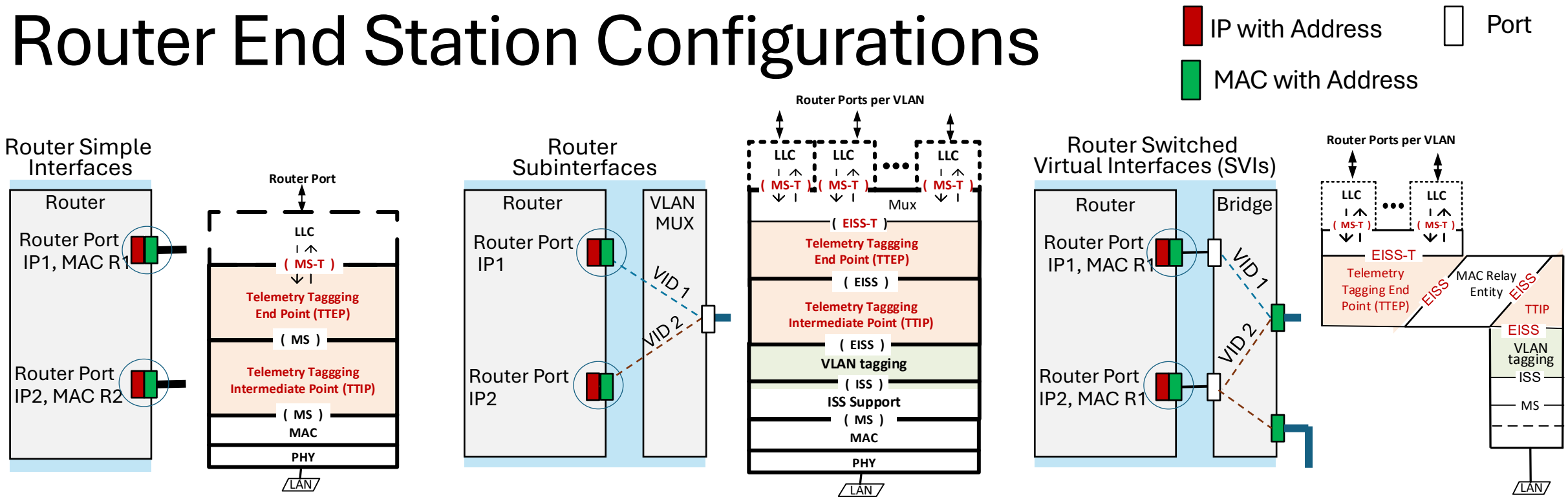

- Three distinct types of router interfaces are possible. These are:
  - Simple interface were the router has a direct attachment to a physical MAC port
  - Subinterfaces were multiple router interfaces share a MAC through a VLAN multiplexer
  - Switched Virtual Interfaces (SVIs) where multiple router interfaces have a virtual MAC connected to an internal bridge
- In each router interface before ingress to the router port the telemetry tag is stripped and the telemetry is forwarded to the router port as meta-data.
- In each router interface after egress from the router port a telemetry tag is inserted based on the telemetry meta-data forwarded from the router

End System stack detail

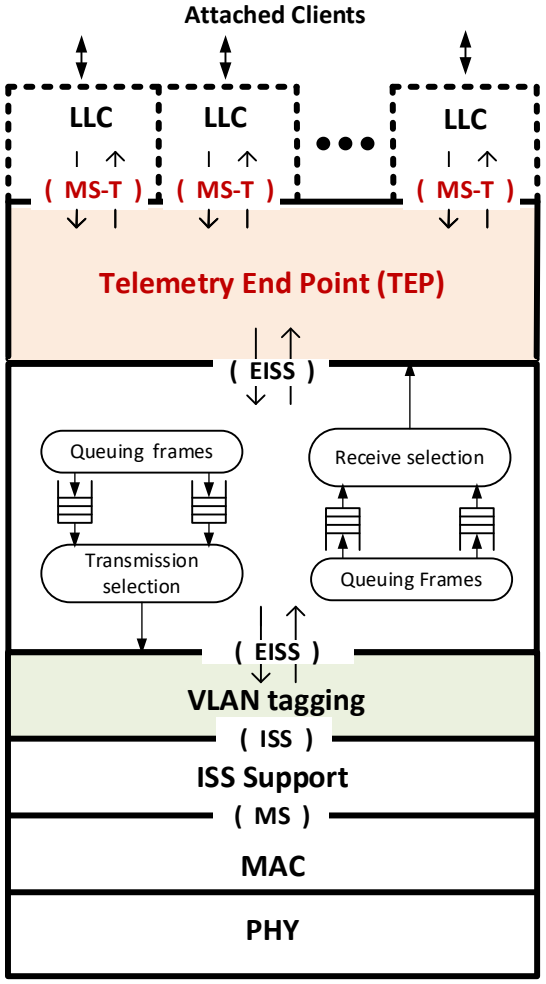

- End Systems could insert the telemetry tag before transmit queuing and extract telemetry after receiver dequeuing.
- Since the receive hop delay can’t be calculated until dequeuing from the receive queues the calculation of hop delay must be after receive dequeue.
- Since the transmit hop delay can’t be calculated until dequeuing from the transmit queues the calculation of hop delay must be after transmit dequeue.

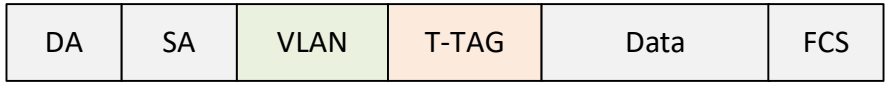

Frame on wire with VLAN aware End Station

Optional End System Telemetry Initiation/Collection

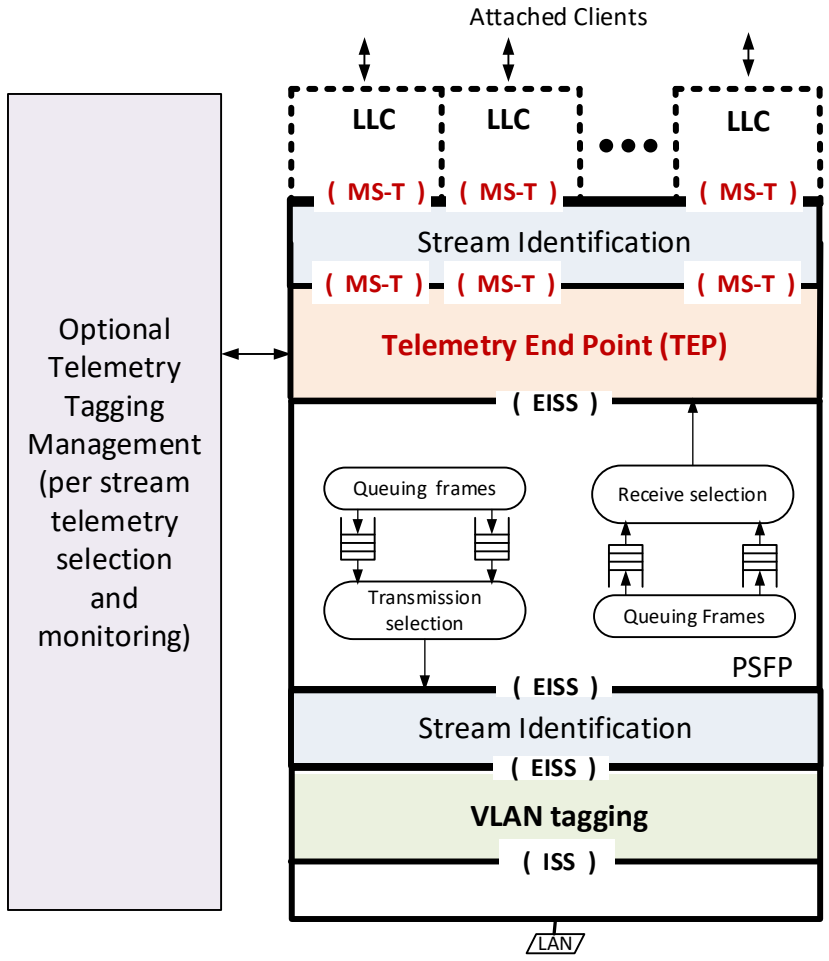

- Current CSIG telemetry requests are initiated at the transport layer.
  - The extended MAC Service interface (MS-T) allows higher layers to control telemetry generation.
- Alternatively, telemetry requests could be initiated at the link layer under management control.
  - A manageable option could be used to enable higher layer telemetry or link layer telemetry.
  - Management could specify a set of triples composed of Signal, Sample Period,and Stream Identifier indicating the telemetry requested.
    - Here stream identification is used to identify flows as well as streams.
    - Identification would typically use IP Stream identification and would not use sequence numbers
    - For a host we need to use identification of the transmit frames from higher layers and identification of received frames from the lower layers.
  - For telemetry collection the link layer could capture all telemetry data along with the stream handle and local time.

Alternative VLAN Bridge Models

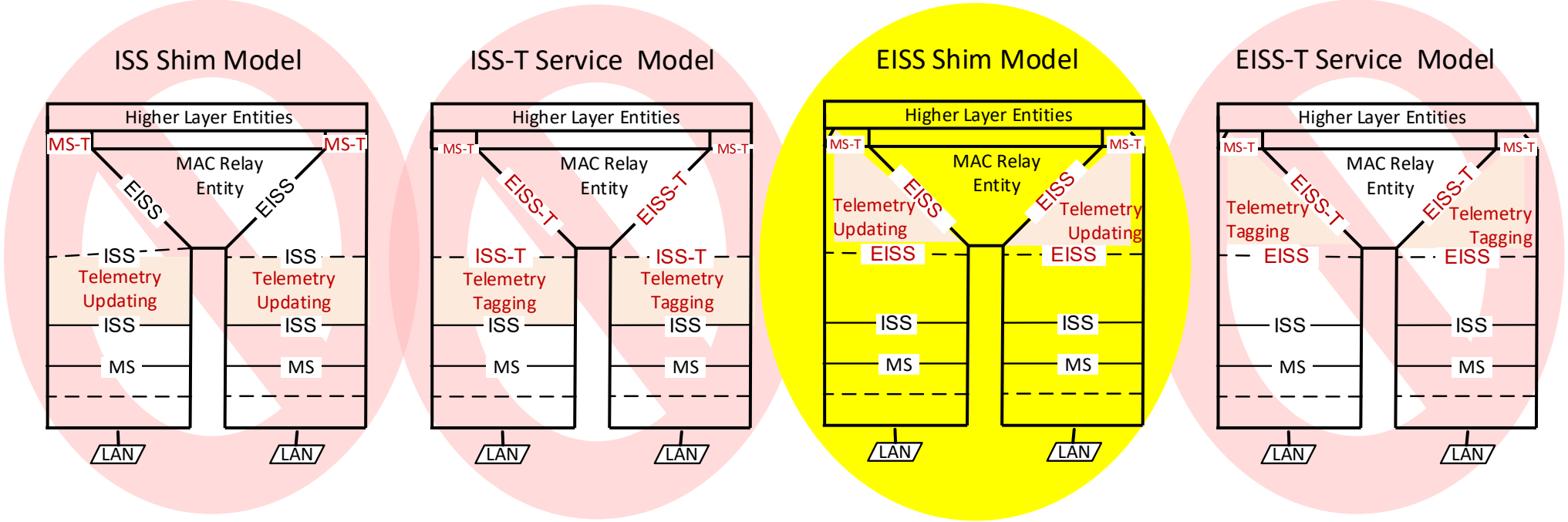

- The two Service Interface models (ISS-T and EISS-T) force major changes to bridge implementation since they imply reducing the telemetry to meta-data which needs to be carried over the bridge relay with each frame.
- All current CSIG implementations use the shim model which allows the telemetry to pass over the bridge relay within the CSIG tag.
  - Passing the CSIG tag over the bridge relay has allowed retrofitting CSIG support in many existing switches
- Since the telemetry tag is located under the VLAN tag the ISS shim model implies parsing past the VLAN.
- In the EISS shim model the VLAN tag has been removed allowing direct access to the telemetry tag.
- In a MAC Bridge there will be no VLAN tag so a telemetry tag updating needs to be an ISS shim.

Telemetry Updating in MAC Bridge

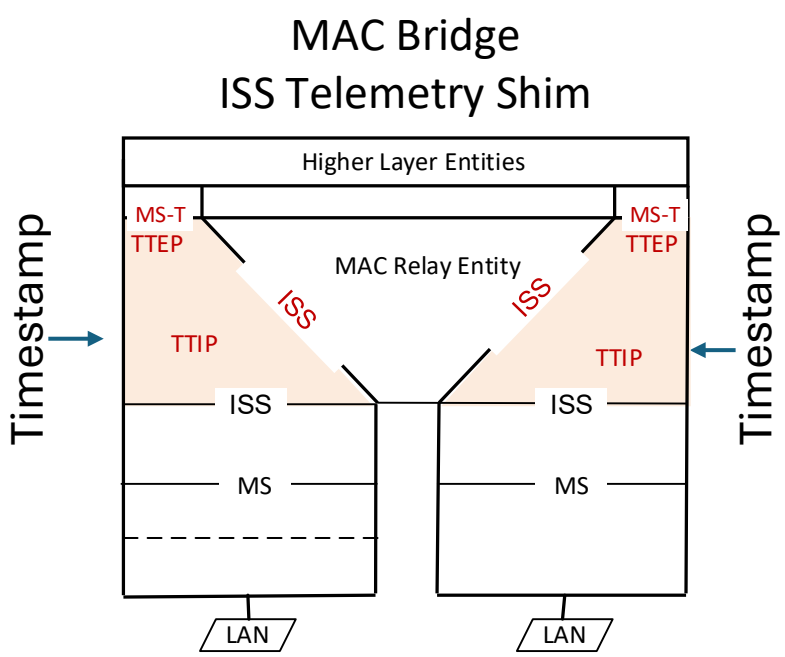

- A MAC Bridge will only update the telemetry tag if it is the top tag in the frame
- On ingress the telemetry shim time stamps the frame before queuing it
  - The timestamp is carried as a parameter of the ISS connection_identifier
- At egress the telemetry shim:
  - Calculates the signal value for the specified signal type
  - Compares the calculated signal value to the signal value carried in the Telemetry TAG
  - If the compare is for max and the calculated signal value is greater than the tag's signal value the tag is updated
  - If the compare is min and the calculated signal value is less than the tag's signal value the tag is updated



Frame on wire for MAC Bridge telemetry update

Optional L2 Telemetry Initiation and Collection

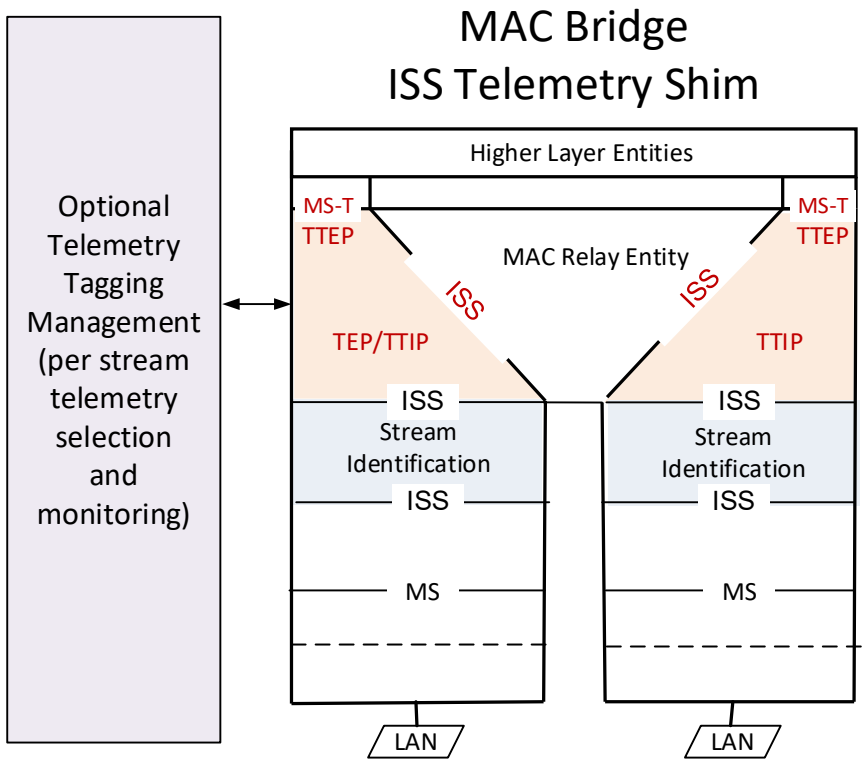

- Telemetry collection and initiation could be initiated from a Bridge Port
  - Could be used within provider or enterprise networks.
- Collection and initiation of telemetry at the link would be controlled by a management interface.
  - Needs some configurable options to enable end station telemetry or in network telemetry.
  - For initiation, management could specify a set of triples composed of Signal, Sample Period,and Stream Identifier indicating the telemetry requested.
  - For collection, the link layer could capture all telemetry data along with the signal, signal value, locator, stream handles, local time, initial packet fields, etc.
  - Alternatively, collection could be configured to only record data from packets with specific stream handles.

Telemetry Updating in VLAN Bridges

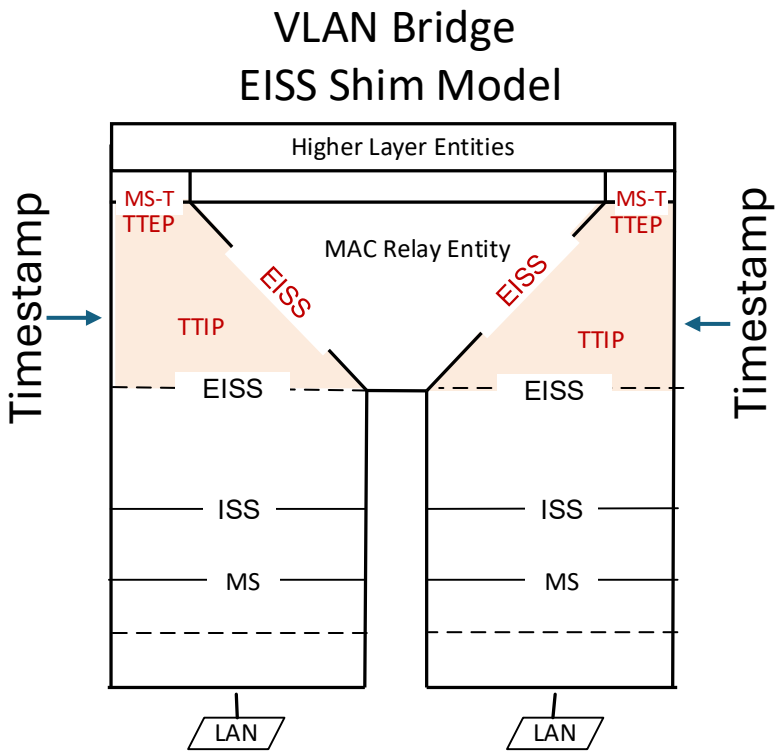

- A VLAN Bridge will only update the telemetry tag if it is immediately after the VLAN tag
- On ingress the telemetry shim timestamps the frame before queuing it
  - The timestamp is carried as a parameter of the EISS connection_identifier
- At egress the telemetry shim:
  - Calculates the signal value for the specified signal type
  - Compares the calculated signal value to the signal value carried in the Telemetry TAG
  - If the compare is for max and the calculated signal value is greater than the tag's signal value the tag is updated
  - If the compare is min and the calculated signal value is less than the tag's signal value the tag is updated

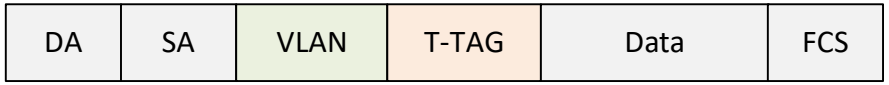

Frame on wire for VLAN Bridge telemetry update

Provider Bridge Port-based service issue

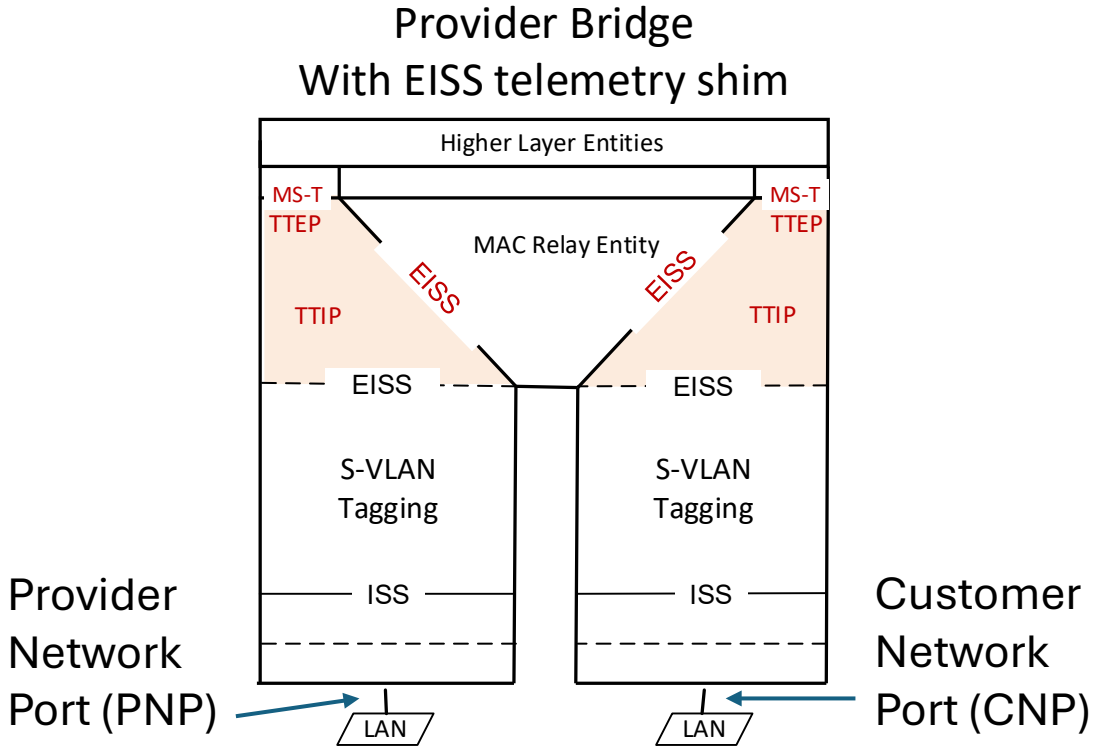

- This configuration does not provide consistent results
  - For untagged or S-VLAN tagged frames from the customer the telemetry tag is updated normally by the Provider Bridge
  - However, for C-VLAN tagged frames from the customer the telemetry tag is hidden under the C-VLAN tag and therefore not updated by the Provider Bridge
- Some switches which decode tag stacks can parse past C-VLAN and identify the telemetry tag.

Untagged or S-VLAN tagged Customer Frame

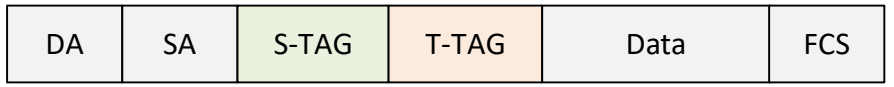

C-VLAN tagged Customer Frame



Since the C-VLAN tag is unrecognized by a Provider Bridge it hides the telemetry tag sitting under it

Provider Edge Bridge with telemetry support

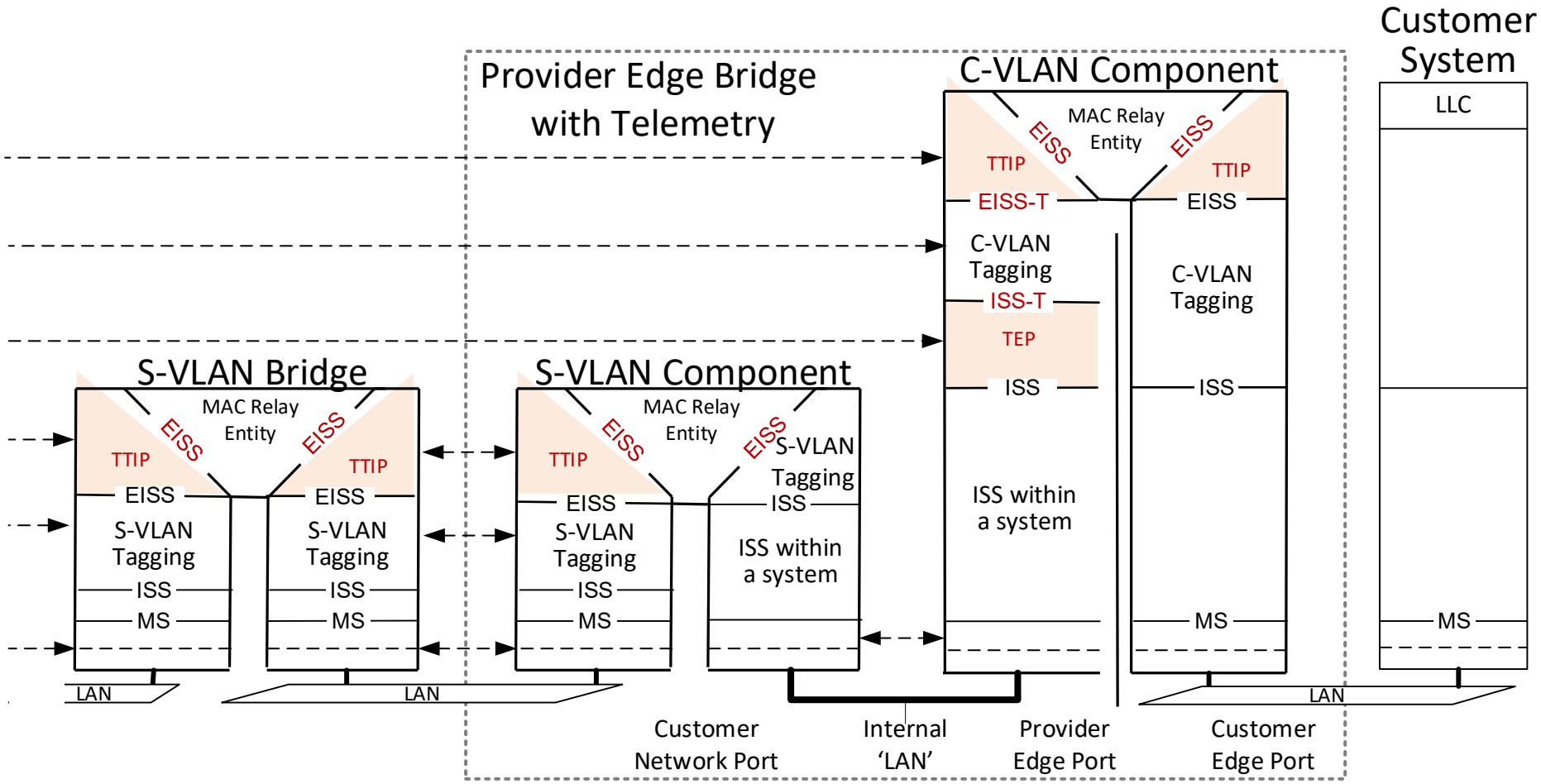

- Here the C-VLAN component is used to move telemetry signaling from under the C-TAG to under the S-TAG allowing telemetry updating in the PBN
- A new T-TAG' is inserted under the S-TAG which starts a new Telemetry Signaling Association (TSigA) covering the provider network

Provider Edge Bridge service interface extensions

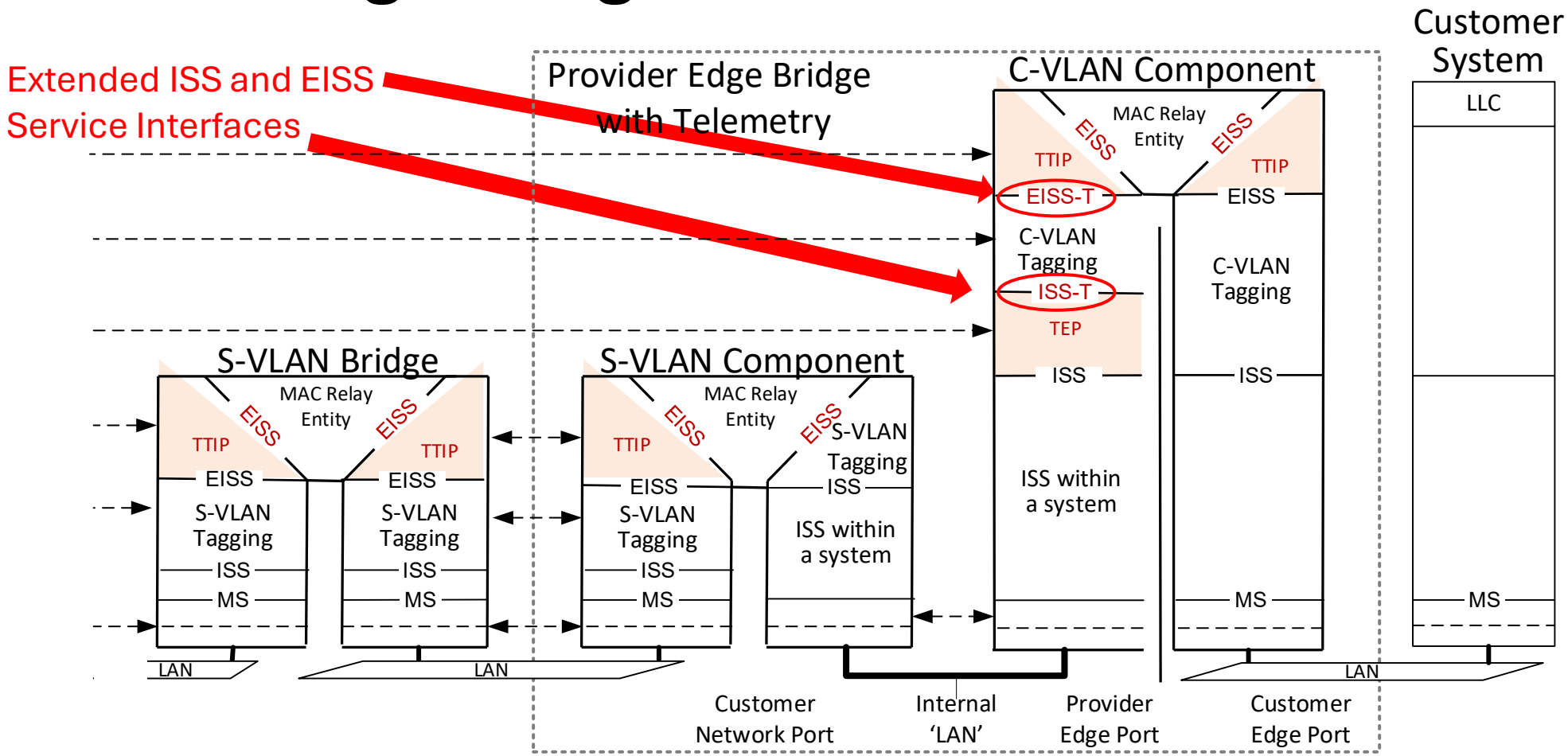

- The ISS-T and EISS-T service interfaces are extensions to the ISS and EISS used to pass the telemetry between the telemetry tagging layers within the C-VLAN Component port.
- These two Telemetry tagging layers are used to move the telemetry from under the C-VLAN tag to a new Provider T-TAG the Provider Edge Port.

Provider Edge Bridge (PEB) encodings choices

Untagged customer frame

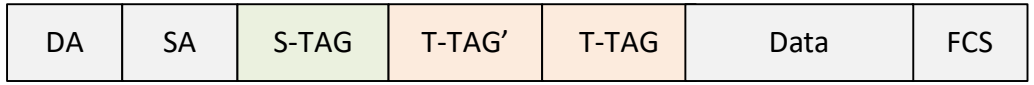

C-VLAN tagged customer frame

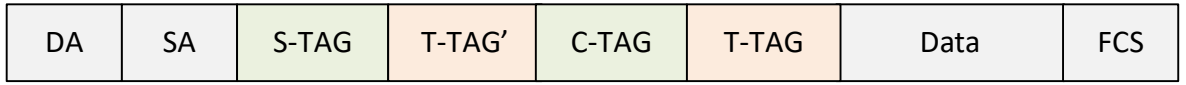

- On ingress to the PBN a new telemetry tag (T-TAG') is placed under the S-TAG.
  - If the Provider is supporting end-to-end telemetry then T-TAG' will use the same signal as the customer telemetry tag (T-TAG).
  - Alternatively, the Provider may generate independent T-TAG's to monitor their network
  - This new T-TAG' is updated by the S-VLAN Bridges or the PBN.
- On egress from the PBN the T-TAG' telemetry may be compared and updated with the T-TAG telemetry.
- The pro of replicating the T-TAG is this allows the PBN to perform a measure of the signal within the PBN separate from the customer network measure.
- The con is the small expansion of the frame size resulting from stacking T-TAGs
- The level of telemetry tagging is not provided in the tag
  - For the 4 byte T4-TAG no space is available for a level indicator
  - For the 8 byte T8-TAG it might be possible to designate a level indicator
- The locator metadata for T-TAG' will be set by the Provider and therefore is not co-ordinated with the Customer
  - If the T-TAG is updated on Provider egress then some well know locator would be used
  - i.e. we could set aside 8 locators used to identify the telemetry nesting level

Provider Edge Bridge local switch hop delay

- Even though a Provider Edge Bridge (PEB) is modeled as two components (an S-VLAN and C-VLAN components) typical switches have a single set of buffers and therefore the delay calculation should be from ingress to egress of the PEB.
- This requires the timestamp taken at the ingress C-VLAN component to be carried over the Internal LAN connecting the C-VLAN Component to the S-VLAN Component.
- Clause 6.14 or IEEE Std 802.1Q supports passing the ISS parameters over the internal LAN. In particular, if the timestamp is encoded as a sub-parameter within the connection_identifier it could be carried over the internal interface.

Timestamps in a Provider Edge Bridge

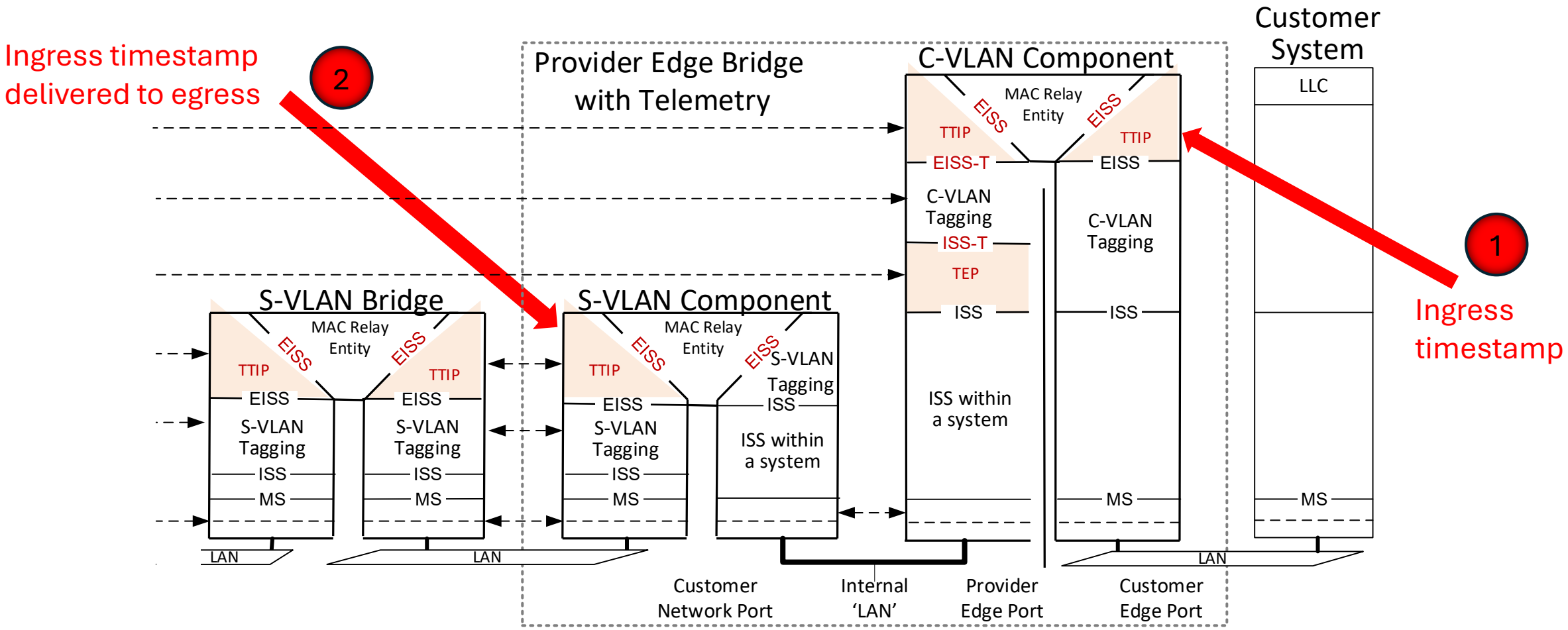

- Here the timestamp is delivered from the telemetry updating layer of the C-VLAN component (point 1) to the telemetry updating layer of the S-VLAN component (point 2).
- This operations requires passing the timestamp over the internal 'LAN' which is supported by IEEE Std 802.1Q clause 6.14.

Summary

- IEEE 802 Modeling requires supporting extensions to the MAC Service Interface to allow passing telemetry from(to) higher layer protocols
- All our service interfaces A(MS, ISS, and EISS) need a way to support passing timestamp metadata
  - The MAC Service Interface needs either a time_stamp parameter or a general metadata parameter such as the connection_identifier defined for the ISS and EISS.
  - The ISS and EISS could use a sub-parameter of the connection_identifier to support passing a time_stamp parameter
- To support Provider Bridge modeling we will need to pass the telemetry parameters up and down the port stack.
  - The most natural way to do this is to provide ISS and EISS variants supporting the telemetry extension
  - We do not need to pass the telemetry as metadata over the Bridge relay

Thoughts on 802.1EH clauses

- 1.0-4.0 Overview - Abbreviations
- 5.0 Conformance
  - VLAN Bridge component supporting TTDF
  - Provider Edge Bridge supporting TTDF
  - MAC Bridge component supporting TTDF
  - End station supporting TTDF
  - End system supporting TTDF
- 6.0 Support of MAC Service with telemetry
  - MS-T
  - ISS and EISS extensions

Thoughts on 802.1EH clauses

- 7.0 Principles of Telemetry Tagging of Data Frames
  - Telemetry Signaling Domains (DoTSig)
  - Telemetry Signaling Associations (TSigA)
  - Telemetry Tagging Associations (TTA)
  - Telemetry Signaling Entities (TTEP, TTIP, TEP)
  - DoTSig Examples
- 8.0 TTDF Entity Operation
  - TTEP half functions
  - TTIP half functions
  - TEP half functions
  - Telemetry aware End Station operation
  - Telemetry aware Bridge operation
- 9.0 Telemetry tag formats
  - 4 Byte Tag format
  - 8 Byte Tag format
  - Tag field encodings
- 10.0 TTDF Signals
  - Min(ABW)
  - Min(ABW/C)
  - Max(Delay)
  - Max(nQD)

Thoughts on 802.1EH clauses

- 11.0 Telemetry configuration
- 12.0 YANG data models for End Stations
- 13.0 YANG data models for Bridges
- Annex A: PICS proforma – Telemetry Tagging of Data Frames (Normative)
- Annex B: Router Interface Types (Informative)
- Annex C: Bibliography

Thank You

Backup

CSIG as General-Purpose Telemetry

- Many Possible Use Cases for CSIG:
  - End-to-End Congestion Control (requires integration with L4)
  - Path Selection and Load Balancing
  - Debugging and Fault Isolation
  - Traffic Engineering
  - SLA Compliance
- Currently, CSIG is used to provide precision telemetry at the transport layer to improve congestion control, path selection, and load balancing.
- However, since the telemetry is collected and transmitted at L2 it could be used for general purpose telemetry at any of the L2, L3 or L4 layers.
- Providing CSIG support at L2 enables the use of CSIG in environments with conventional transport protocols such as TCP.
  - Conventional transport protocols would require modification to enhance L4 congestion control, but other applications such as debugging and fault isolation can be supported without change to the transport protocol.