Channels for determining 448G performance requirements

April 2025

Vivek Shah – Molex

Scott Sommers - Molex

molex®
one company › a world of innovation

Overview

- This presentation provides details on the channel models contributed to E4AI group
- Chip to Module channel configuration is selected for building the channel scenarios
- Methodology:
  - Channel models constitutes of PCB trace, IO connector with mated module and a very short trace
  - Channel models excludes Package model on both host and module side
  - Various Insertion Loss scenarios are generated by adding additional trace loss
  - Various Insertion Loss roll-off and bandwidth scenarios are generated by varying electrical stub at mating interface
  - Impact of RL is minimized in the channel models by idealizing the impairments in the channel
  - FEXT and NEXT models are generated from host side
  - Various FEXT and NEXT noise level scenarios are generated by varying loss of the channels
  - Users can evaluate the impact of various IL, Roll-off frequencies and crosstalk by mixing and matching any IL models with any crosstalk models, and with a goal of understanding the channel sensitivities and determining performance requirements for 448G data rate

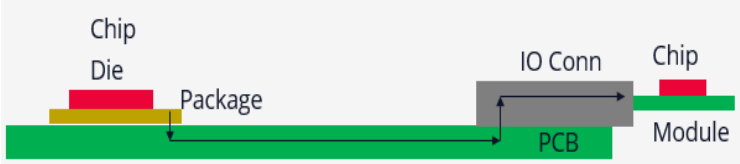

IL Channel models

#	Channel Model Name	IL @75GHz	IL roll-off
1	448G_Channel_1_IL_25dB_RO_75G	-25 dB	75 GHz
2	448G_Channel_1_IL_25dB_RO_80G	-25 dB	80 GHz
3	448G_Channel_1_IL_25dB_RO_85G	-25 dB	85 GHz
4	448G_Channel_1_IL_30dB_RO_75G	-30 dB	75 GHz
5	448G_Channel_1_IL_30dB_RO_80G	-30 dB	80 GHz
6	448G_Channel_1_IL_30dB_RO_85G	-30 dB	85 GHz
7	448G_Channel_1_IL_35dB_RO_75G	-35 dB	75 GHz
8	448G_Channel_1_IL_35dB_RO_80G	-35 dB	80 GHz
9	448G_Channel_1_IL_35dB_RO_85G	-35 dB	85 GHz

FEXT Channel models

#	Channel Model Name	PSFEXT @75GHz
1	FEXT_VL4_A1_448G_Channel_1_PSFEXT_50dB.s4p FEXT_VL4_A2_448G_Channel_1_PSFEXT_50dB.s4p FEXT_VL4_A3_448G_Channel_1_PSFEXT_50dB.s4p FEXT_VL4_A5_448G_Channel_1_PSFEXT_50dB.s4p FEXT_VL4_A6_448G_Channel_1_PSFEXT_50dB.s4p FEXT_VL4_A7_448G_Channel_1_PSFEXT_50dB.s4p FEXT_VL4_A8_448G_Channel_1_PSFEXT_50dB.s4p	-50 dB
2	FEXT_VL4_A1_448G_Channel_1_PSFEXT_55dB.s4p FEXT_VL4_A2_448G_Channel_1_PSFEXT_55dB.s4p FEXT_VL4_A3_448G_Channel_1_PSFEXT_55dB.s4p FEXT_VL4_A5_448G_Channel_1_PSFEXT_55dB.s4p FEXT_VL4_A6_448G_Channel_1_PSFEXT_55dB.s4p FEXT_VL4_A7_448G_Channel_1_PSFEXT_55dB.s4p FEXT_VL4_A8_448G_Channel_1_PSFEXT_55dB.s4p	-55 dB
3	FEXT_VL4_A1_448G_Channel_1_PSFEXT_60dB.s4p FEXT_VL4_A2_448G_Channel_1_PSFEXT_60dB.s4p FEXT_VL4_A3_448G_Channel_1_PSFEXT_60dB.s4p FEXT_VL4_A5_448G_Channel_1_PSFEXT_60dB.s4p FEXT_VL4_A6_448G_Channel_1_PSFEXT_60dB.s4p FEXT_VL4_A7_448G_Channel_1_PSFEXT_60dB.s4p FEXT_VL4_A8_448G_Channel_1_PSFEXT_60dB.s4p	-60 dB
4	FEXT_VL4_A1_448G_Channel_1_PSFEXT_65dB.s4p FEXT_VL4_A2_448G_Channel_1_PSFEXT_65dB.s4p FEXT_VL4_A3_448G_Channel_1_PSFEXT_65dB.s4p FEXT_VL4_A5_448G_Channel_1_PSFEXT_65dB.s4p FEXT_VL4_A6_448G_Channel_1_PSFEXT_65dB.s4p FEXT_VL4_A7_448G_Channel_1_PSFEXT_65dB.s4p FEXT_VL4_A8_448G_Channel_1_PSFEXT_65dB.s4p	-65 dB
5	FEXT_VL4_A1_448G_Channel_1_PSFEXT_70dB.s4p FEXT_VL4_A2_448G_Channel_1_PSFEXT_70dB.s4p FEXT_VL4_A3_448G_Channel_1_PSFEXT_70dB.s4p FEXT_VL4_A5_448G_Channel_1_PSFEXT_70dB.s4p FEXT_VL4_A6_448G_Channel_1_PSFEXT_70dB.s4p FEXT_VL4_A7_448G_Channel_1_PSFEXT_70dB.s4p FEXT_VL4_A8_448G_Channel_1_PSFEXT_70dB.s4p	-70dB

NEXT Channel models

#	Channel Model Name	PSNEXT @75GHz
1	NEXT_VL9_A1_448G_Channel_1_PSNEXT_50dB.s4p NEXT_VL9_A2_448G_Channel_1_PSNEXT_50dB.s4p NEXT_VL9_A3_448G_Channel_1_PSNEXT_50dB.s4p NEXT_VL9_A4_448G_Channel_1_PSNEXT_50dB.s4p NEXT_VL9_A5_448G_Channel_1_PSNEXT_50dB.s4p NEXT_VL9_A6_448G_Channel_1_PSNEXT_50dB.s4p NEXT_VL9_A7_448G_Channel_1_PSNEXT_50dB.s4p NEXT_VL9_A8_448G_Channel_1_PSNEXT_50dB.s4p	-50 dB
2	NEXT_VL9_A1_448G_Channel_1_PSNEXT_55dB.s4p NEXT_VL9_A2_448G_Channel_1_PSNEXT_55dB.s4p NEXT_VL9_A3_448G_Channel_1_PSNEXT_55dB.s4p NEXT_VL9_A4_448G_Channel_1_PSNEXT_55dB.s4p NEXT_VL9_A5_448G_Channel_1_PSNEXT_55dB.s4p NEXT_VL9_A6_448G_Channel_1_PSNEXT_55dB.s4p NEXT_VL9_A7_448G_Channel_1_PSNEXT_55dB.s4p NEXT_VL9_A8_448G_Channel_1_PSNEXT_55dB.s4p	-55 dB
3	NEXT_VL9_A1_448G_Channel_1_PSNEXT_60dB.s4p NEXT_VL9_A2_448G_Channel_1_PSNEXT_60dB.s4p NEXT_VL9_A3_448G_Channel_1_PSNEXT_60dB.s4p NEXT_VL9_A4_448G_Channel_1_PSNEXT_60dB.s4p NEXT_VL9_A5_448G_Channel_1_PSNEXT_60dB.s4p NEXT_VL9_A6_448G_Channel_1_PSNEXT_60dB.s4p NEXT_VL9_A7_448G_Channel_1_PSNEXT_60dB.s4p NEXT_VL9_A8_448G_Channel_1_PSNEXT_60dB.s4p	-60 dB
4	NEXT_VL9_A1_448G_Channel_1_PSNEXT_65dB.s4p NEXT_VL9_A2_448G_Channel_1_PSNEXT_65dB.s4p NEXT_VL9_A3_448G_Channel_1_PSNEXT_65dB.s4p NEXT_VL9_A4_448G_Channel_1_PSNEXT_65dB.s4p NEXT_VL9_A5_448G_Channel_1_PSNEXT_65dB.s4p NEXT_VL9_A6_448G_Channel_1_PSNEXT_65dB.s4p NEXT_VL9_A7_448G_Channel_1_PSNEXT_65dB.s4p NEXT_VL9_A8_448G_Channel_1_PSNEXT_65dB.s4p	-65 dB
5	NEXT_VL9_A1_448G_Channel_1_PSNEXT_70dB.s4p NEXT_VL9_A2_448G_Channel_1_PSNEXT_70dB.s4p NEXT_VL9_A3_448G_Channel_1_PSNEXT_70dB.s4p NEXT_VL9_A4_448G_Channel_1_PSNEXT_70dB.s4p NEXT_VL9_A5_448G_Channel_1_PSNEXT_70dB.s4p NEXT_VL9_A6_448G_Channel_1_PSNEXT_70dB.s4p NEXT_VL9_A7_448G_Channel_1_PSNEXT_70dB.s4p NEXT_VL9_A8_448G_Channel_1_PSNEXT_70dB.s4p	-70dB

IL Channels

- Filename: 448G_Channel_1_IL_25dB_RO_75G.s4p

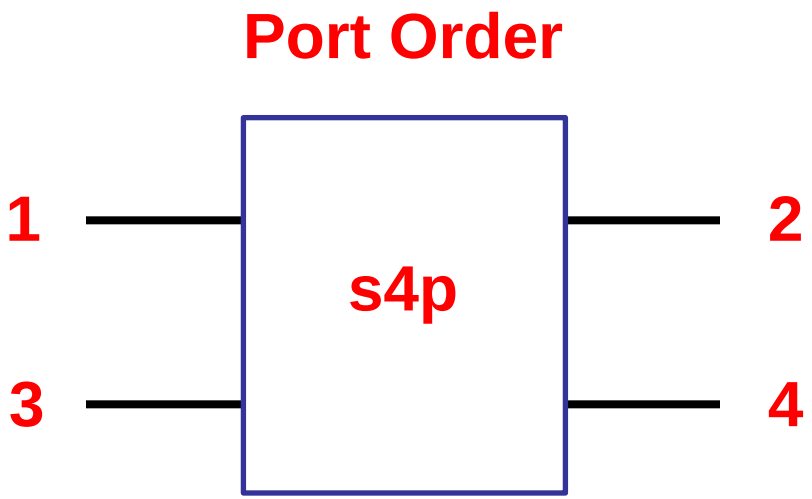

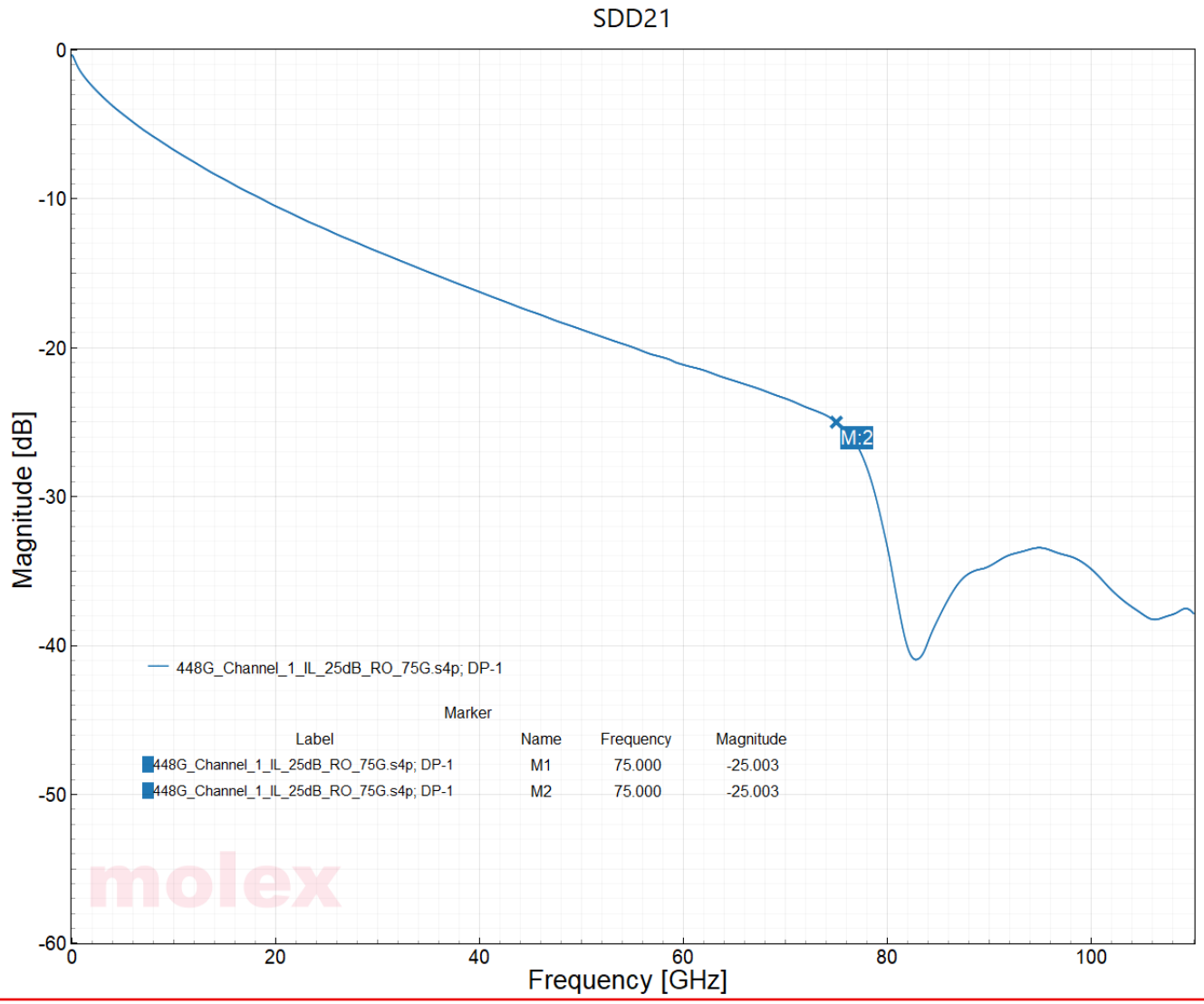

IL Channels

- Filename: 448G_Channel_1_IL_25dB_RO_80G.s4p

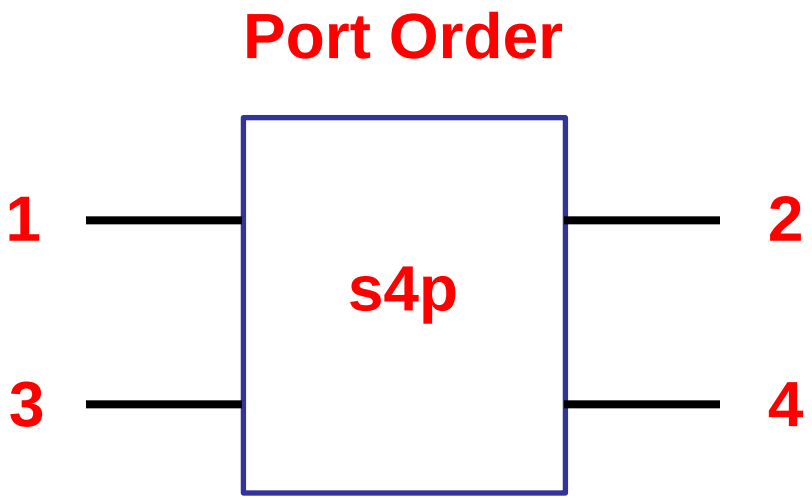

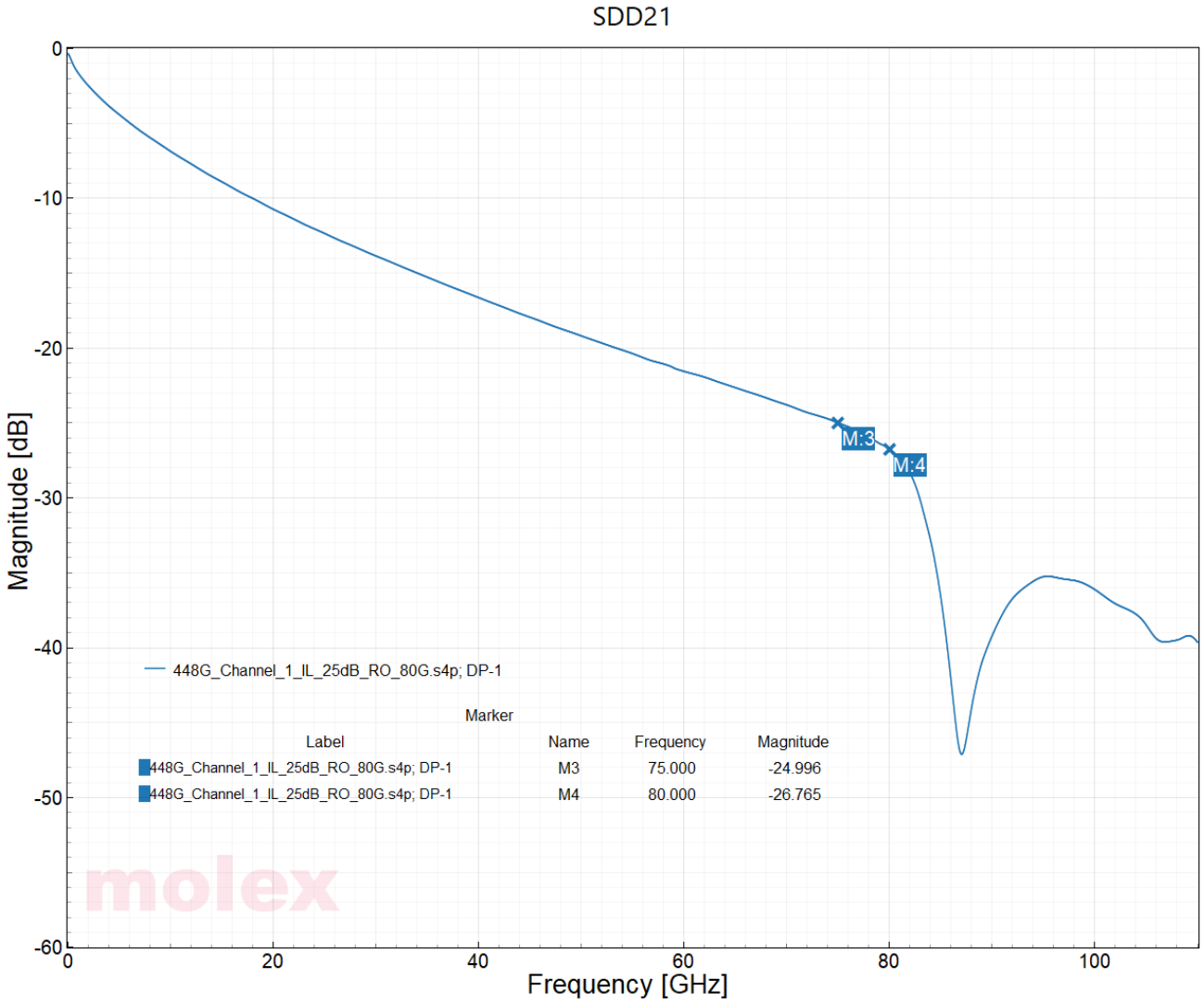

IL Channels

- Filename: 448G_Channel_1_IL_25dB_RO_85G.s4p

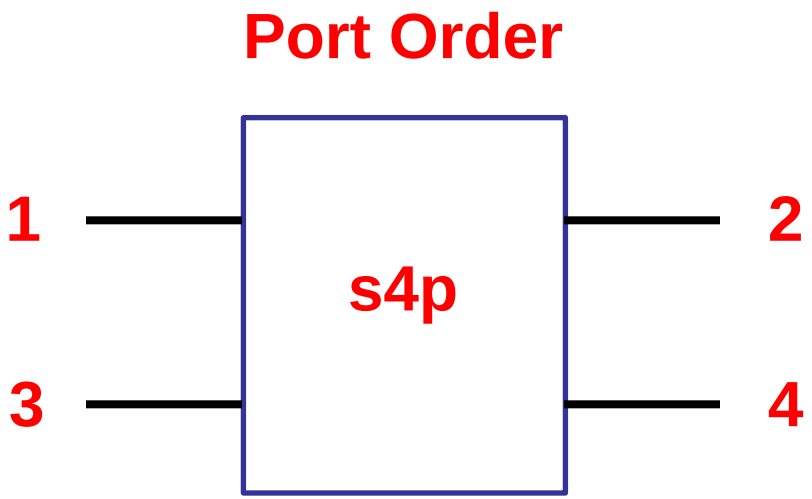

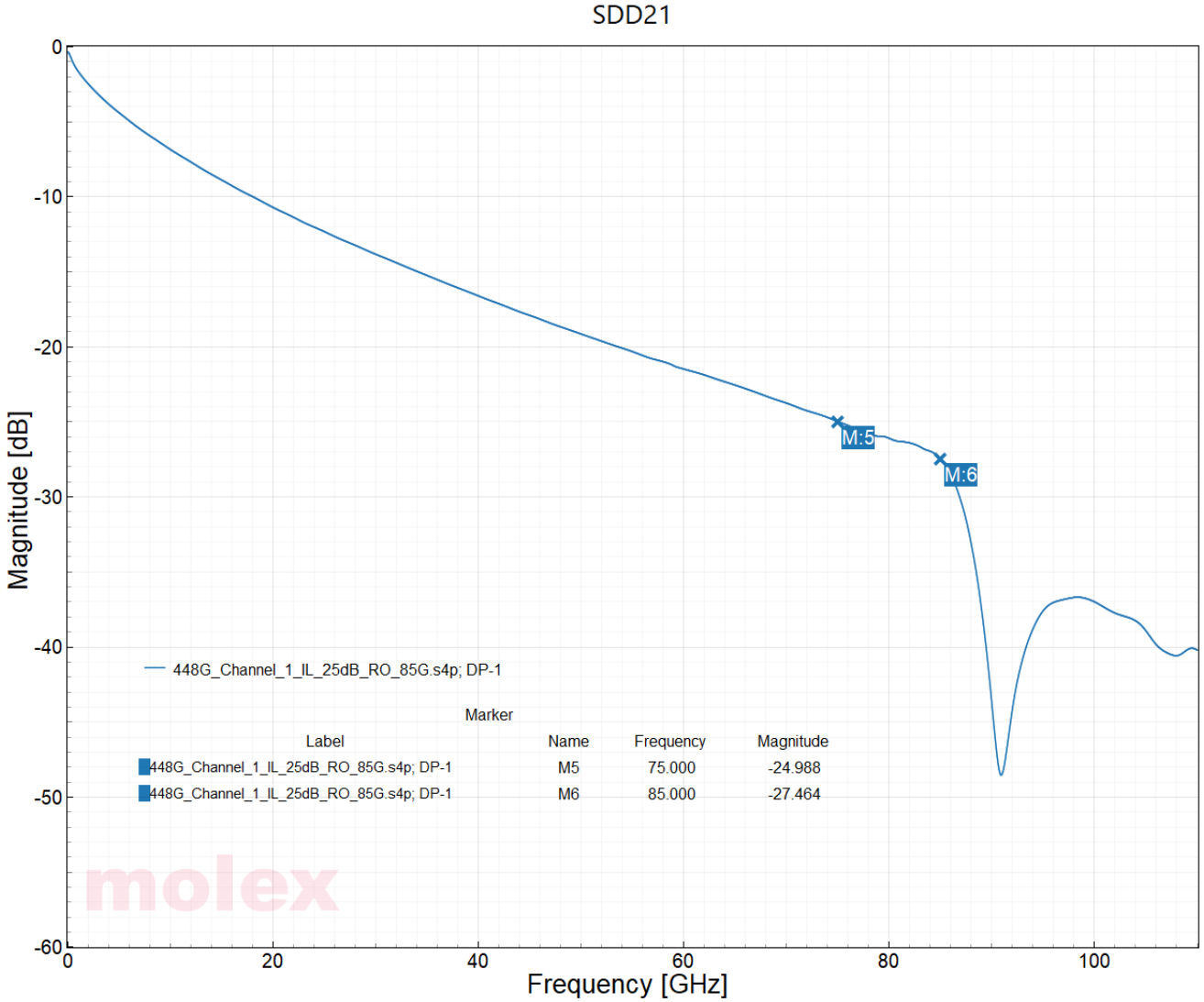

IL Channels

- Filename: 448G_Channel_1_IL_30dB_RO_75G.s4p

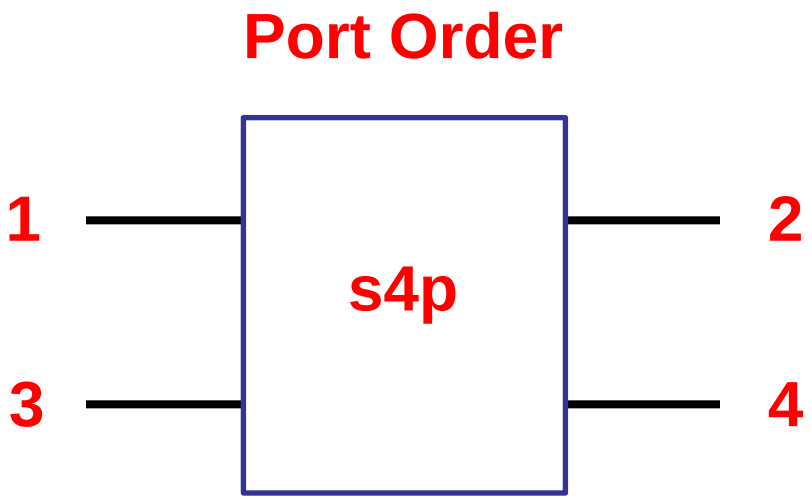

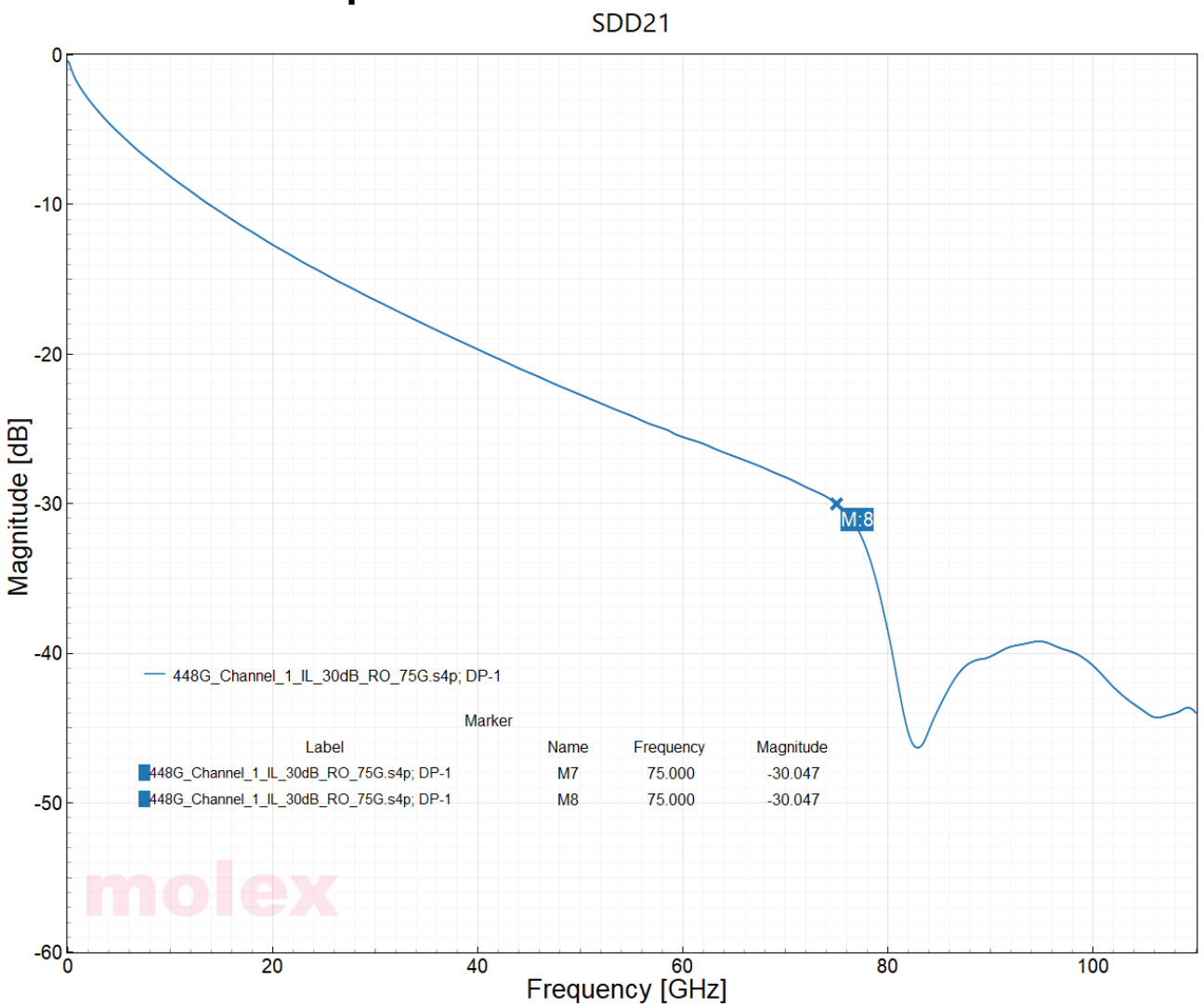

IL Channels

- Filename: 448G_Channel_1_IL_30dB_RO_80G.s4p

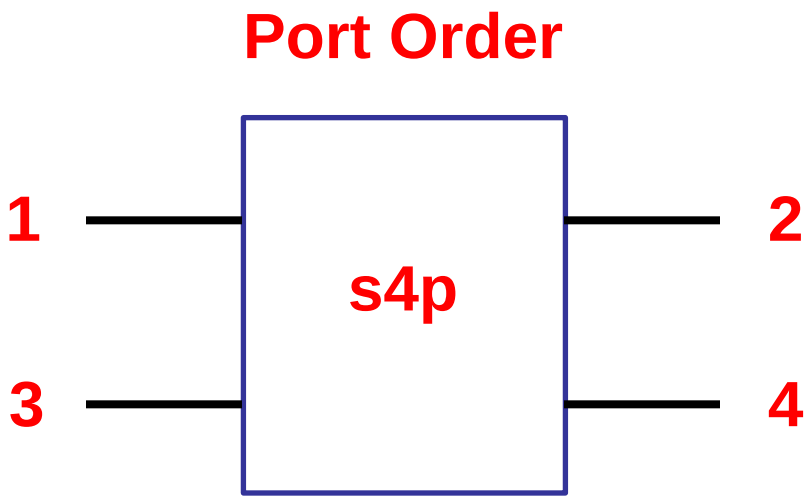

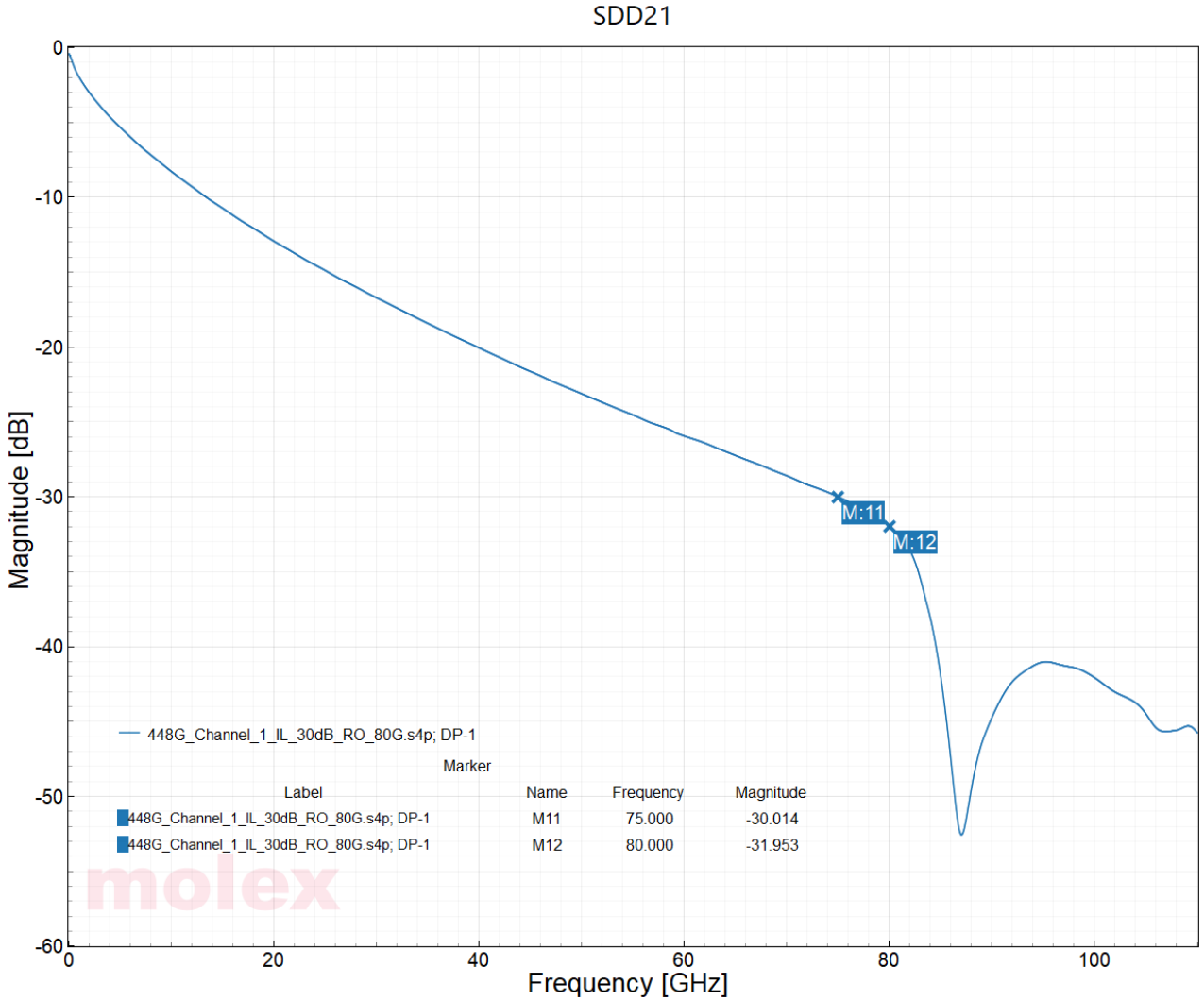

IL Channels

- Filename: 448G_Channel_1_IL_30dB_RO_85G.s4p

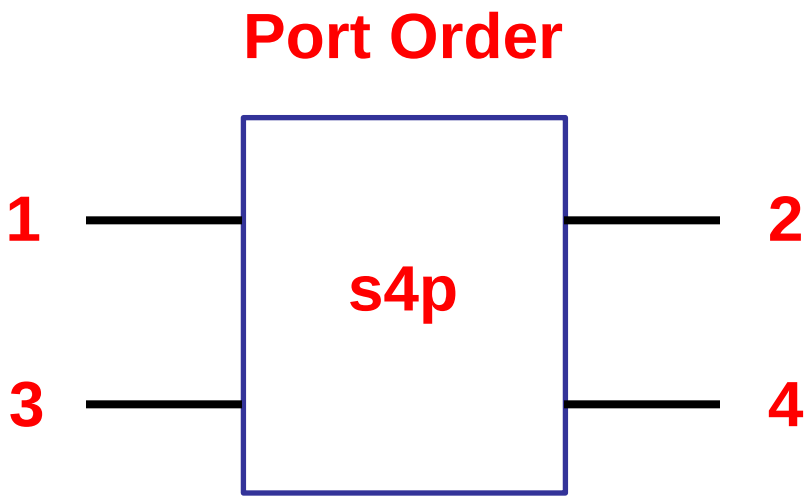

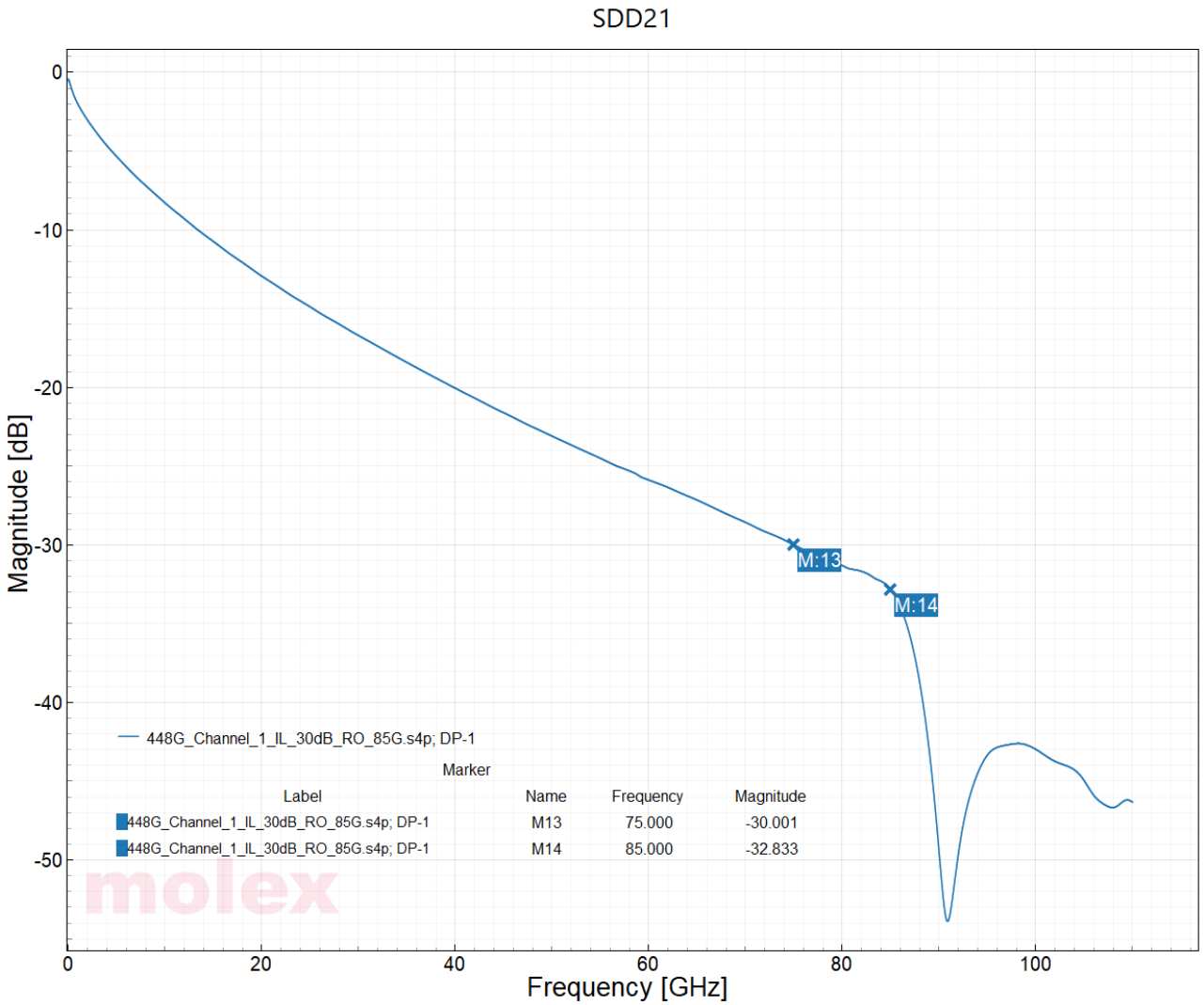

IL Channels

- Filename: 448G_Channel_1_IL_35dB_RO_75G.s4p

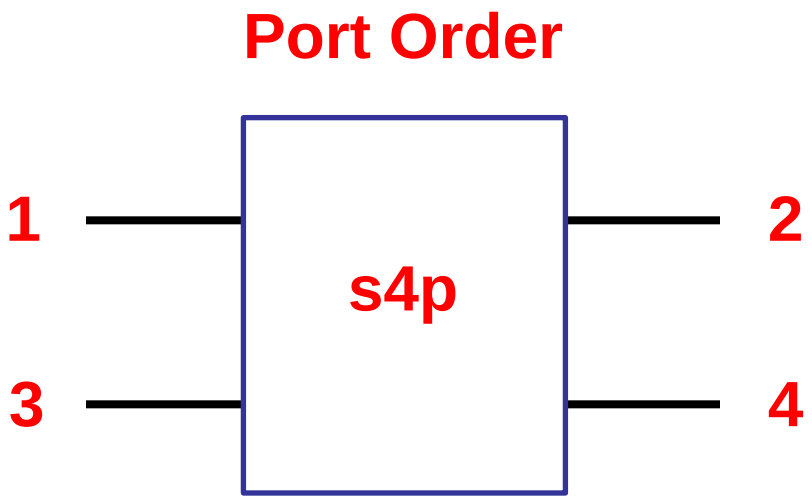

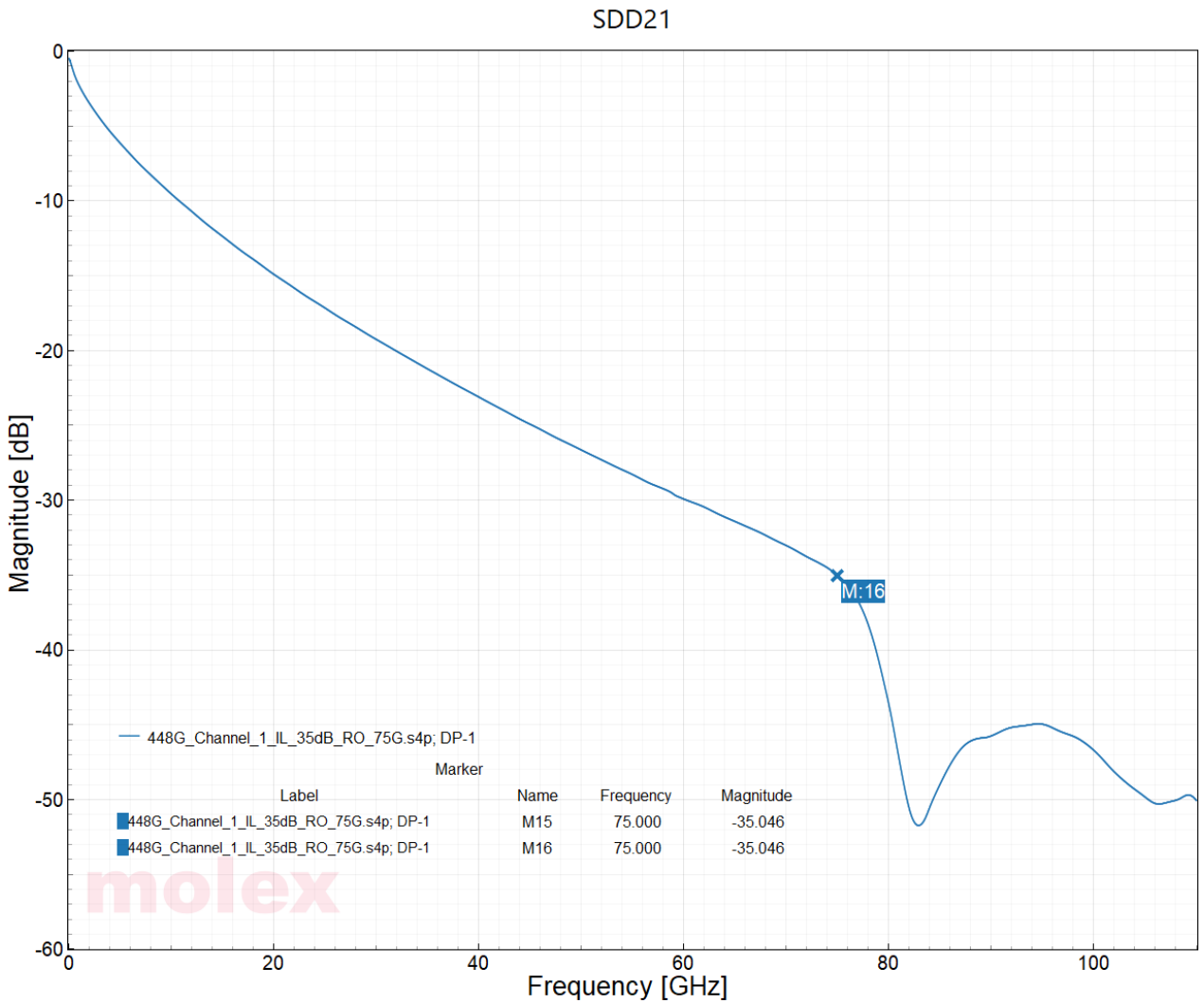

IL Channels

- Filename: 448G_Channel_1_IL_35dB_RO_80G.s4p

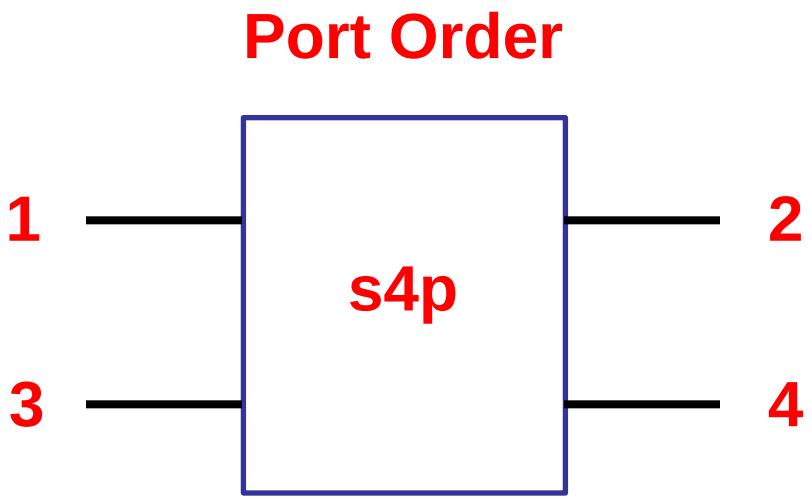

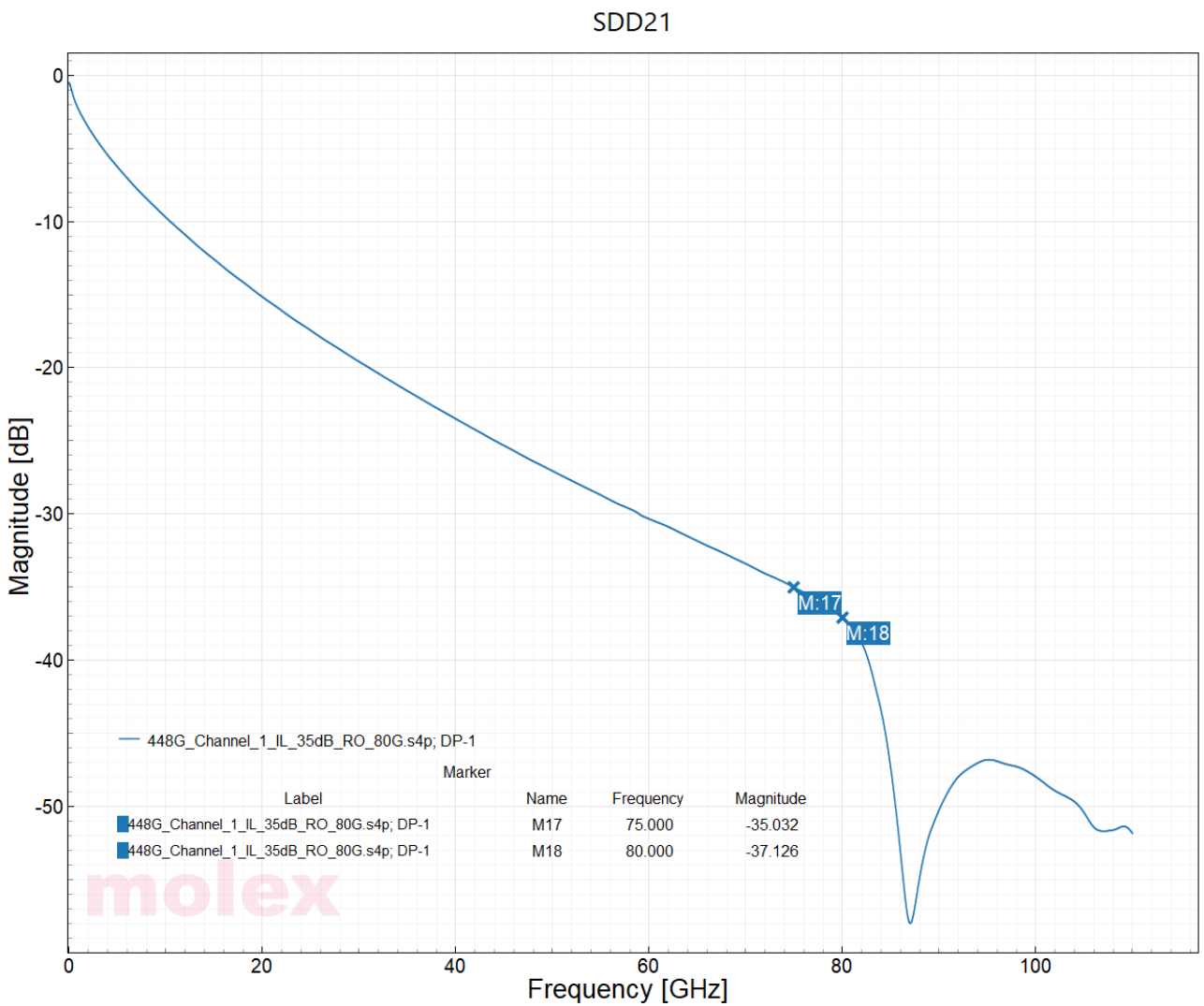

IL Channels

- Filename: 448G_Channel_1_IL_35dB_RO_85G.s4p

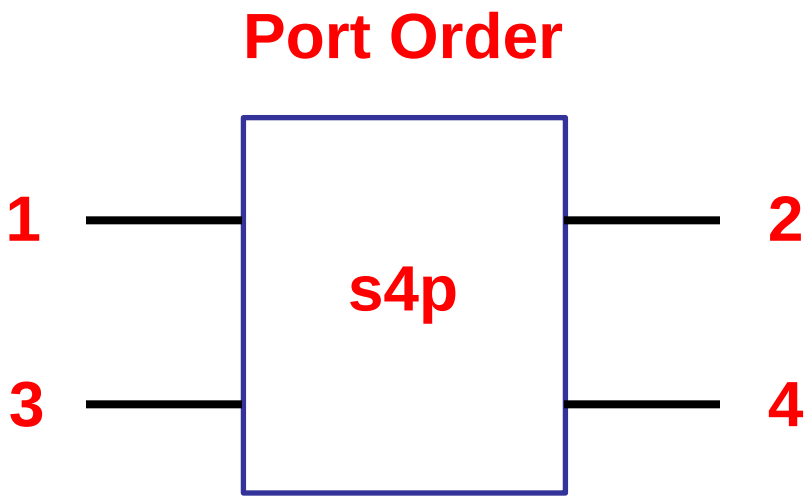

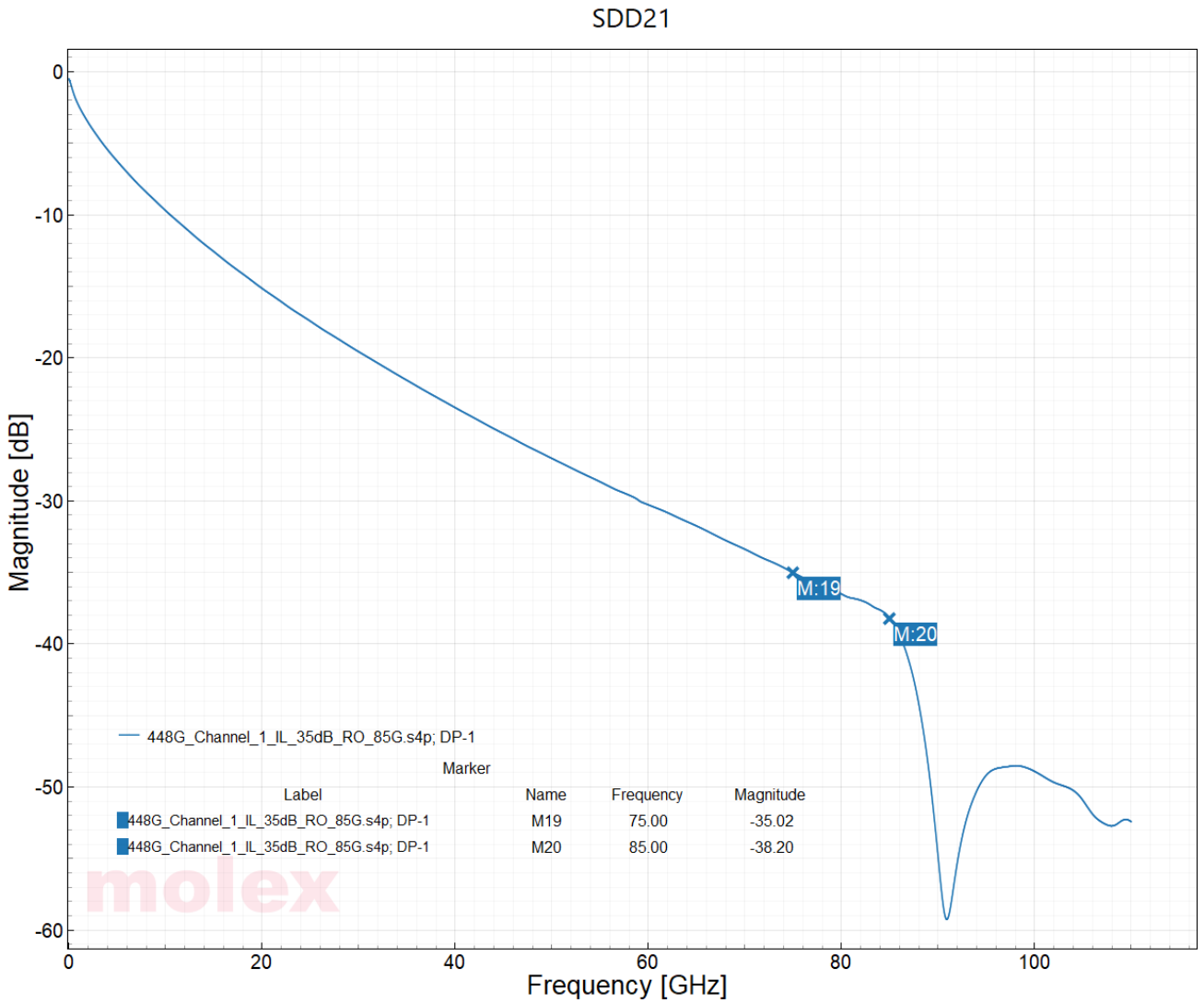

PSFEXT_CHANNEL OVERVIEW

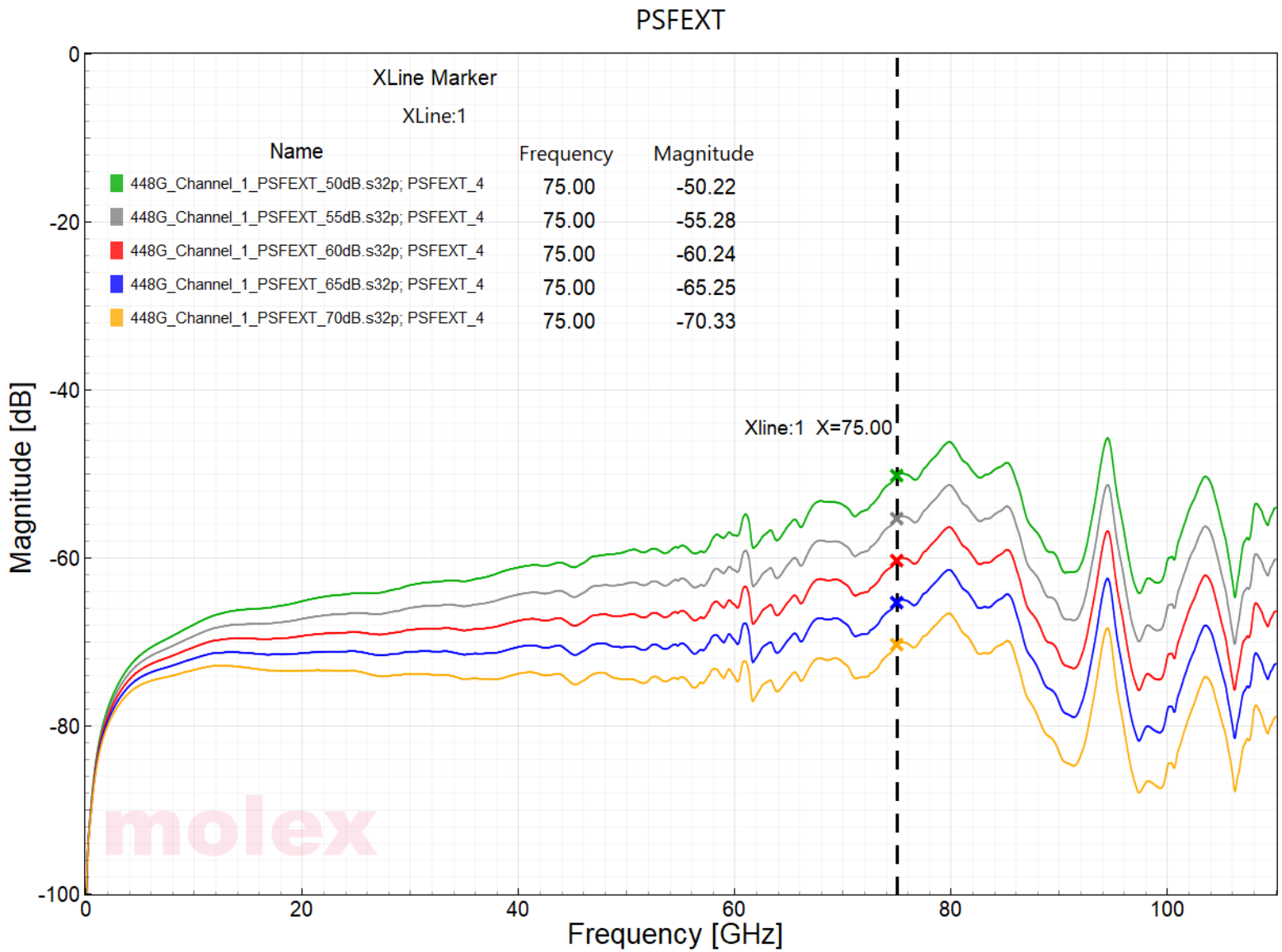

Individual FEXT Channel for PSFEXT_-50dB

Filename:

- FEXT_VL4_A1_448G_Channel_1_PSFEXT_50dB.s4p
- FEXT_VL4_A2_448G_Channel_1_PSFEXT_50dB.s4p
- FEXT_VL4_A3_448G_Channel_1_PSFEXT_50dB.s4p
- FEXT_VL4_A5_448G_Channel_1_PSFEXT_50dB.s4p
- FEXT_VL4_A6_448G_Channel_1_PSFEXT_50dB.s4p
- FEXT_VL4_A7_448G_Channel_1_PSFEXT_50dB.s4p
- FEXT_VL4_A8_448G_Channel_1_PSFEXT_50dB.s4p

Port Order

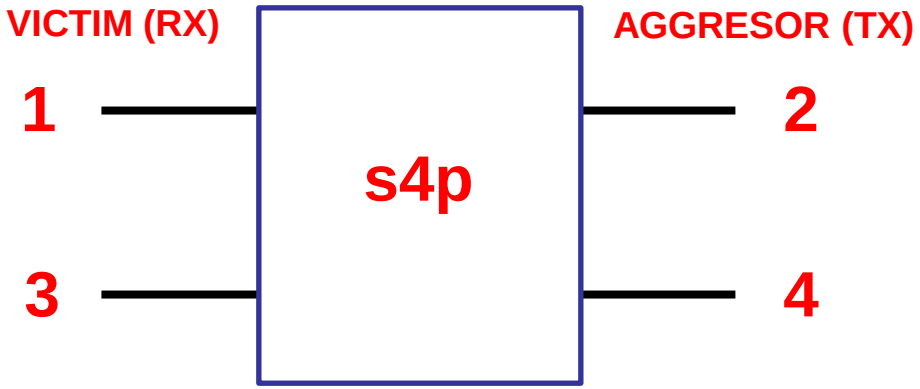

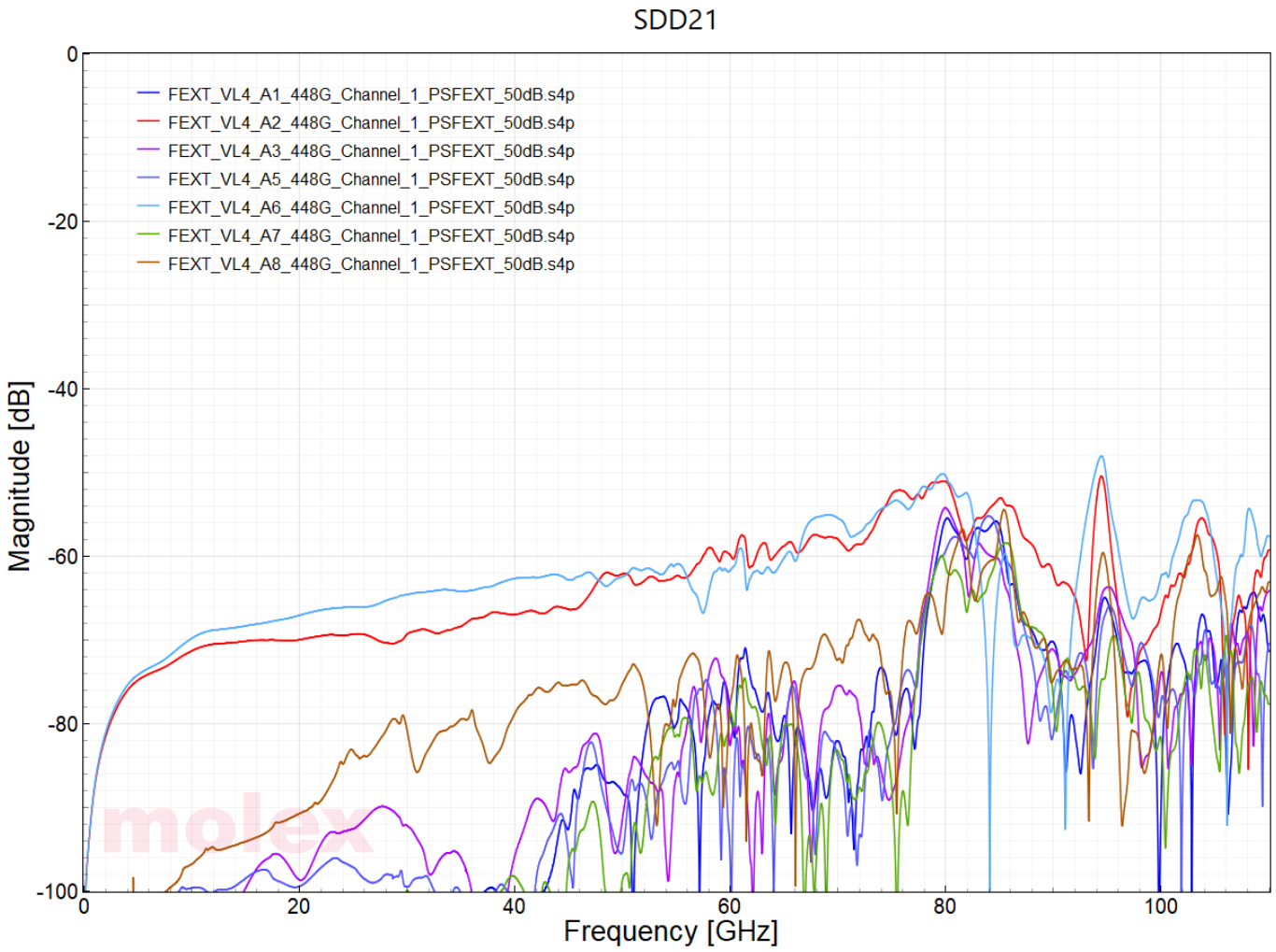

Individual FEXT Channel for PSFEXT_-55dB

Filename:

- FEXT_VL4_A1_448G_Channel_1_PSFEXT_55dB.s4p
- FEXT_VL4_A2_448G_Channel_1_PSFEXT_55dB.s4p
- FEXT_VL4_A3_448G_Channel_1_PSFEXT_55dB.s4p
- FEXT_VL4_A5_448G_Channel_1_PSFEXT_55dB.s4p
- FEXT_VL4_A6_448G_Channel_1_PSFEXT_55dB.s4p
- FEXT_VL4_A7_448G_Channel_1_PSFEXT_55dB.s4p
- FEXT_VL4_A8_448G_Channel_1_PSFEXT_55dB.s4p

Port Order

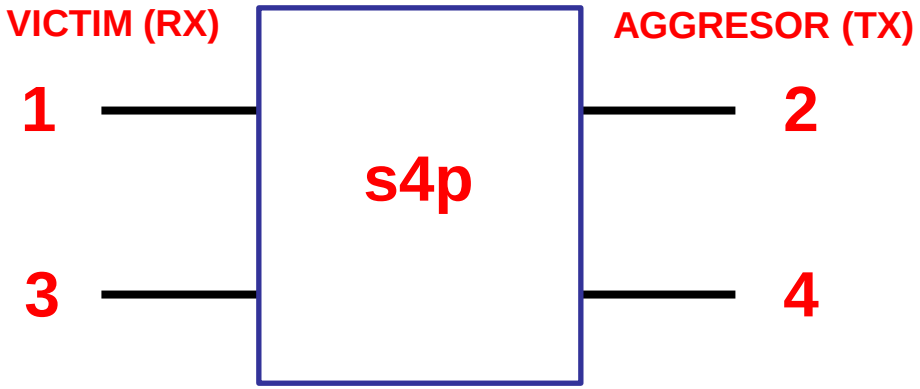

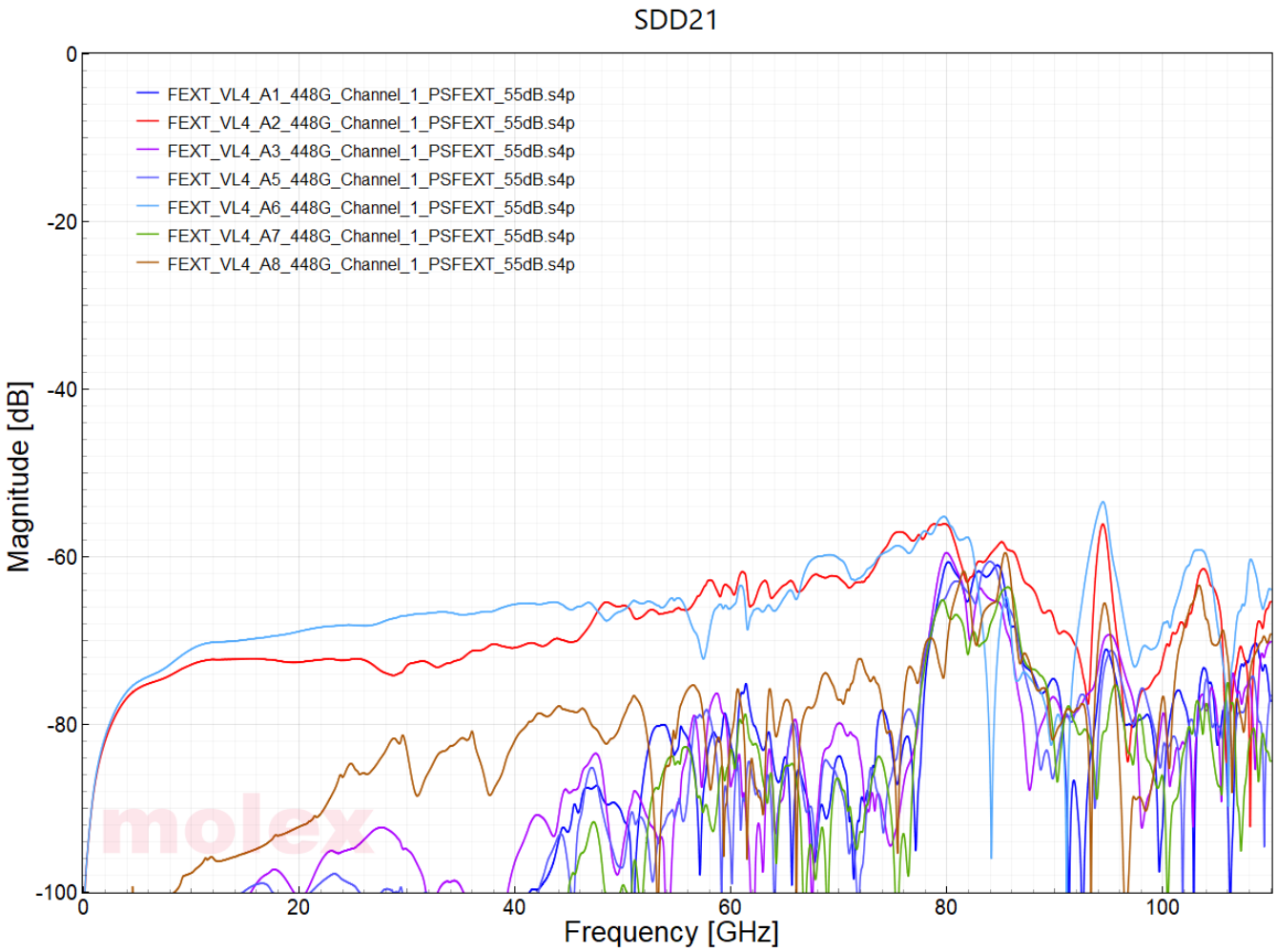

Individual FEXT Channel for PSFEXT_-60dB

Filename:

- FEXT_VL4_A1_448G_Channel_1_PSFEXT_60dB.s4p
- FEXT_VL4_A2_448G_Channel_1_PSFEXT_60dB.s4p
- FEXT_VL4_A3_448G_Channel_1_PSFEXT_60dB.s4p
- FEXT_VL4_A5_448G_Channel_1_PSFEXT_60dB.s4p
- FEXT_VL4_A6_448G_Channel_1_PSFEXT_60dB.s4p
- FEXT_VL4_A7_448G_Channel_1_PSFEXT_60dB.s4p
- FEXT_VL4_A8_448G_Channel_1_PSFEXT_60dB.s4p

Port Order

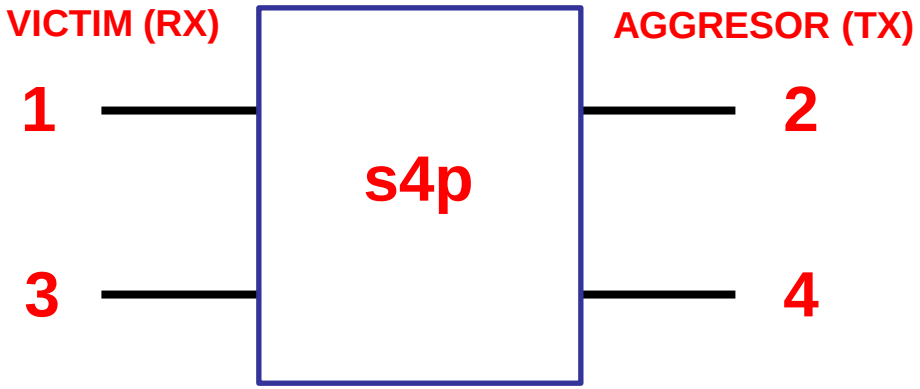

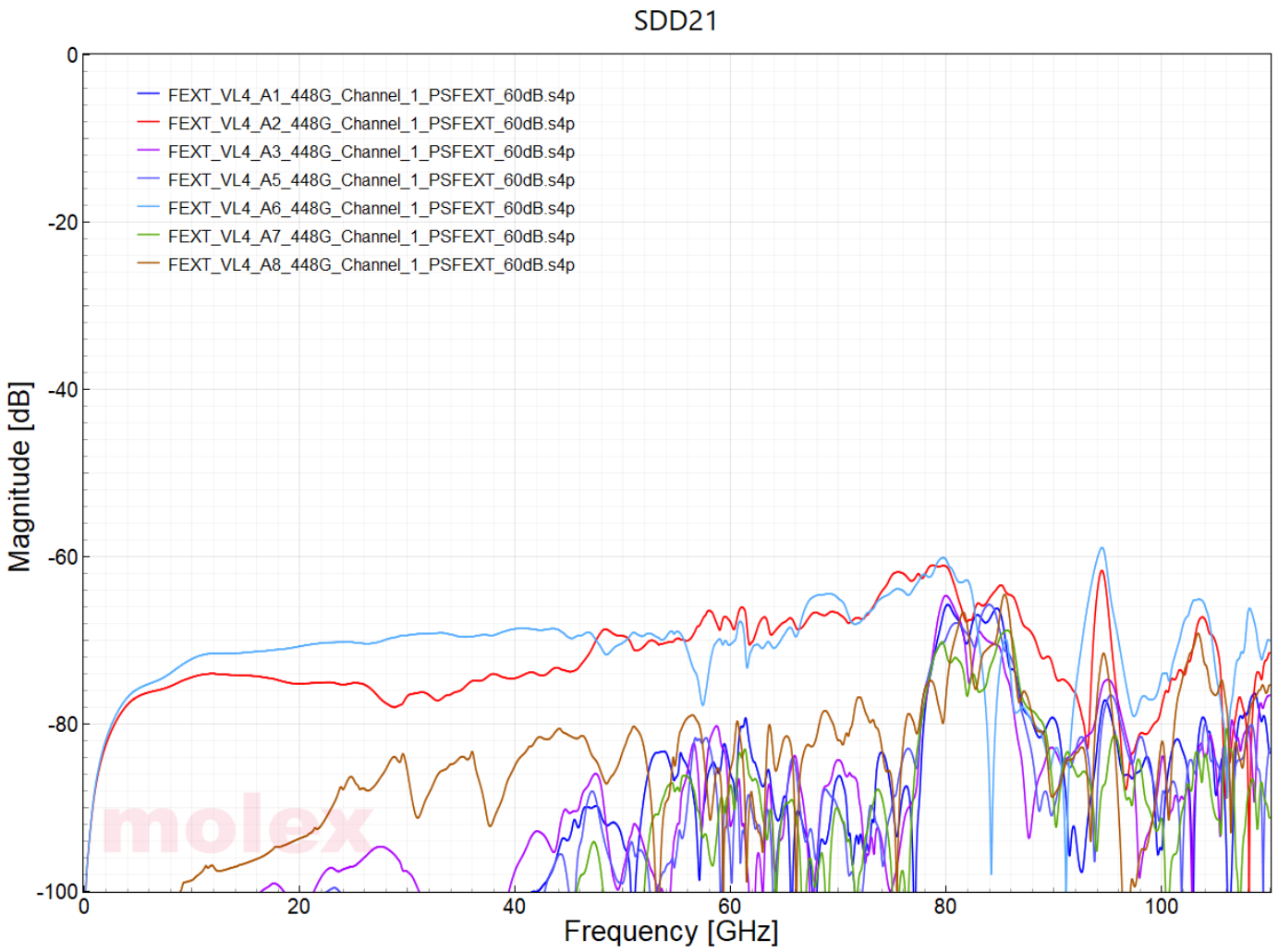

Individual FEXT Channel for PSFEXT_-65dB

Filename:

- FEXT_VL4_A1_448G_Channel_1_PSFEXT_65dB.s4p
- FEXT_VL4_A2_448G_Channel_1_PSFEXT_65dB.s4p
- FEXT_VL4_A3_448G_Channel_1_PSFEXT_65dB.s4p
- FEXT_VL4_A5_448G_Channel_1_PSFEXT_65dB.s4p
- FEXT_VL4_A6_448G_Channel_1_PSFEXT_65dB.s4p
- FEXT_VL4_A7_448G_Channel_1_PSFEXT_65dB.s4p
- FEXT_VL4_A8_448G_Channel_1_PSFEXT_65dB.s4p

Port Order

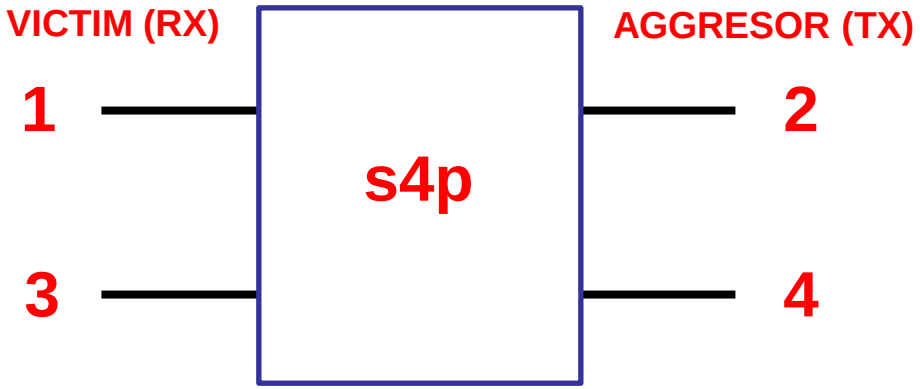

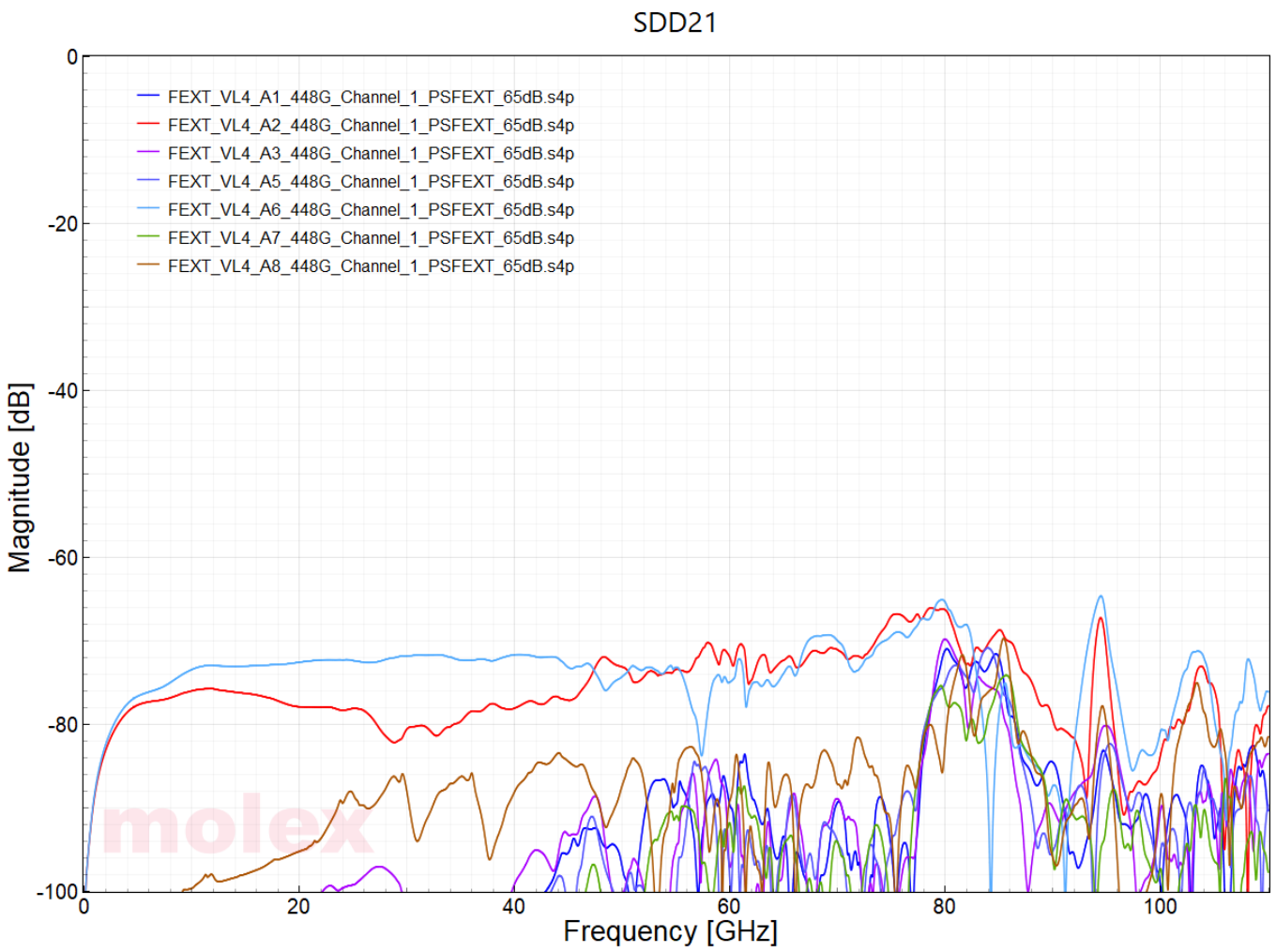

Individual FEXT Channel for PSFEXT_-70dB

Filename:

- FEXT_VL4_A1_448G_Channel_1_PSFEXT_70dB.s4p
- FEXT_VL4_A2_448G_Channel_1_PSFEXT_70dB.s4p
- FEXT_VL4_A3_448G_Channel_1_PSFEXT_70dB.s4p
- FEXT_VL4_A5_448G_Channel_1_PSFEXT_70dB.s4p
- FEXT_VL4_A6_448G_Channel_1_PSFEXT_70dB.s4p
- FEXT_VL4_A7_448G_Channel_1_PSFEXT_70dB.s4p
- FEXT_VL4_A8_448G_Channel_1_PSFEXT_70dB.s4p

Port Order

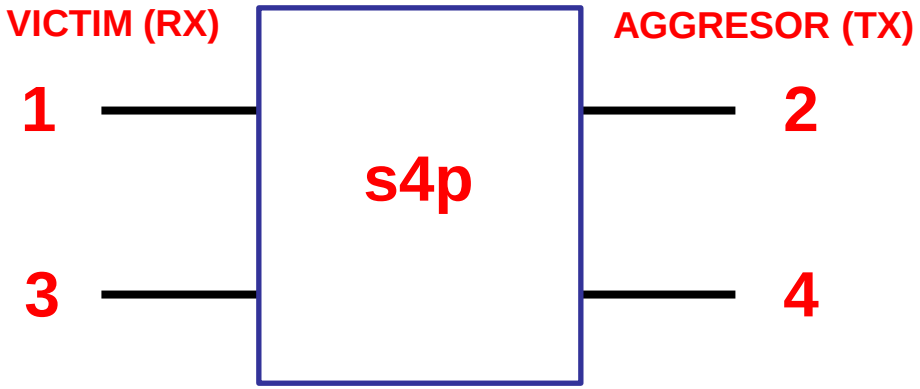

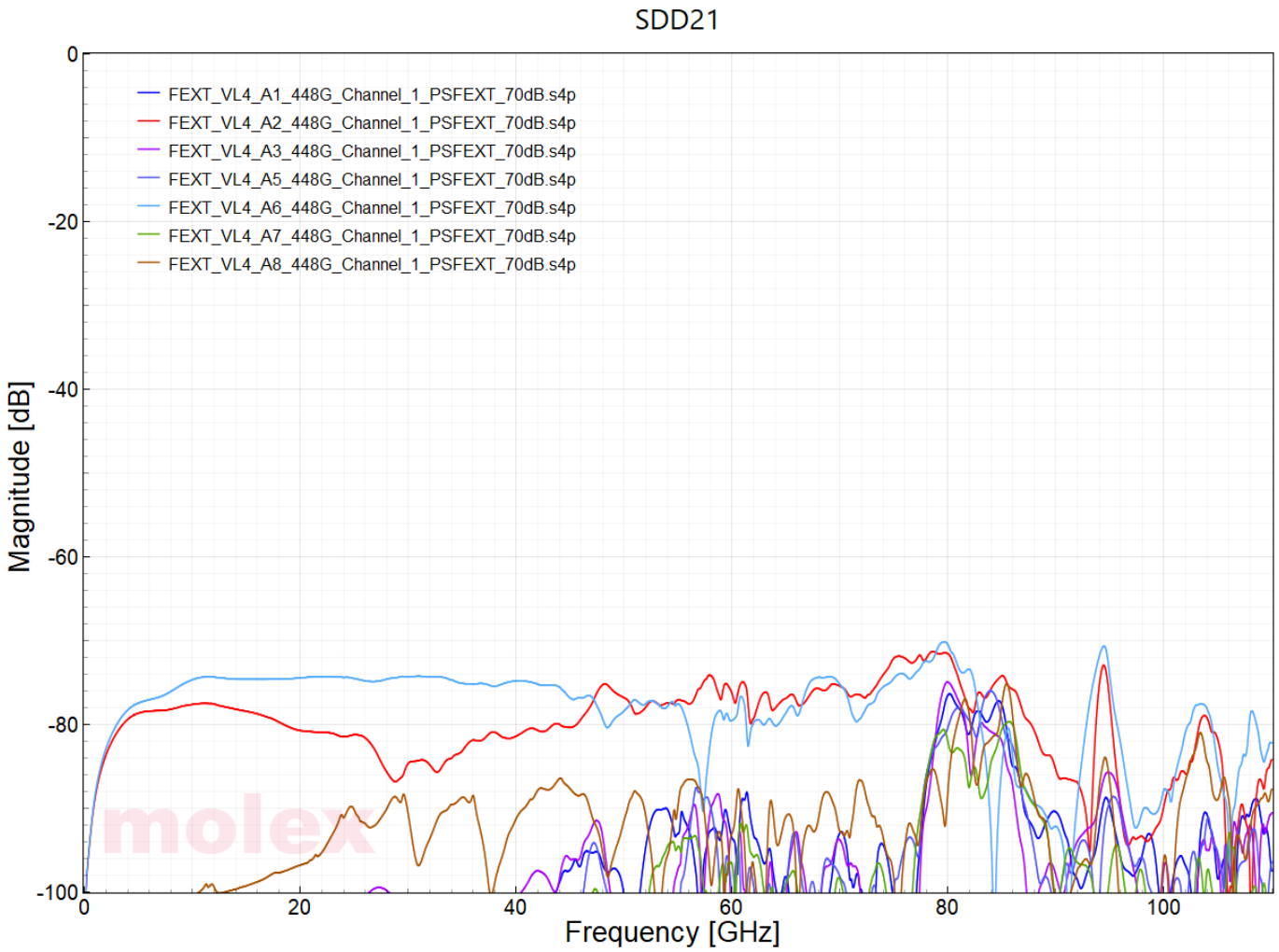

PSNEXT_CHANNEL OVERVIEW

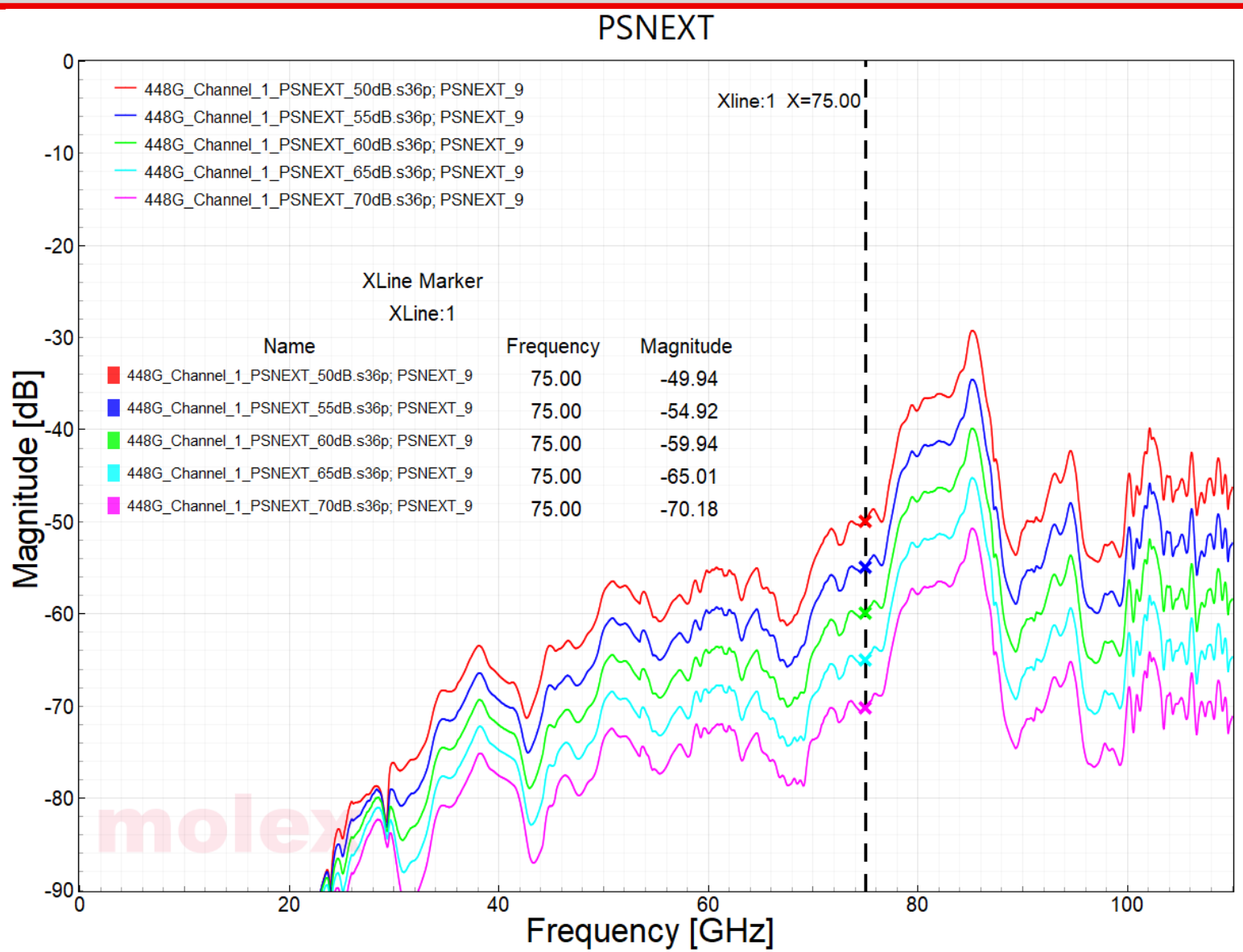

Individual NEXT Channel for PSNEXT_-50dB

Filename:

- NEXT_VL9_A1_448G_Channel_1_PSNEXT_50dB.s4p
- NEXT_VL9_A2_448G_Channel_1_PSNEXT_50dB.s4p
- NEXT_VL9_A3_448G_Channel_1_PSNEXT_50dB.s4p
- NEXT_VL9_A4_448G_Channel_1_PSNEXT_50dB.s4p
- NEXT_VL9_A5_448G_Channel_1_PSNEXT_50dB.s4p
- NEXT_VL9_A6_448G_Channel_1_PSNEXT_50dB.s4p
- NEXT_VL9_A7_448G_Channel_1_PSNEXT_50dB.s4p
- NEXT_VL9_A8_448G_Channel_1_PSNEXT_50dB.s4p

Port Order

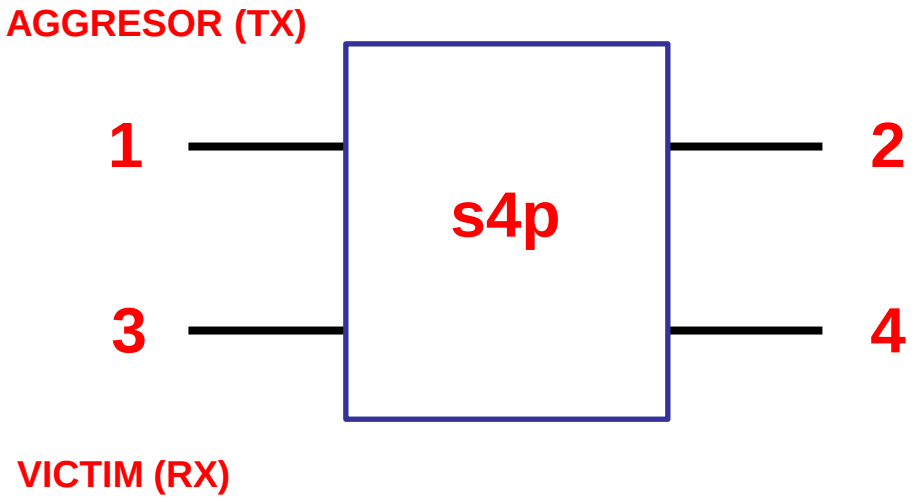

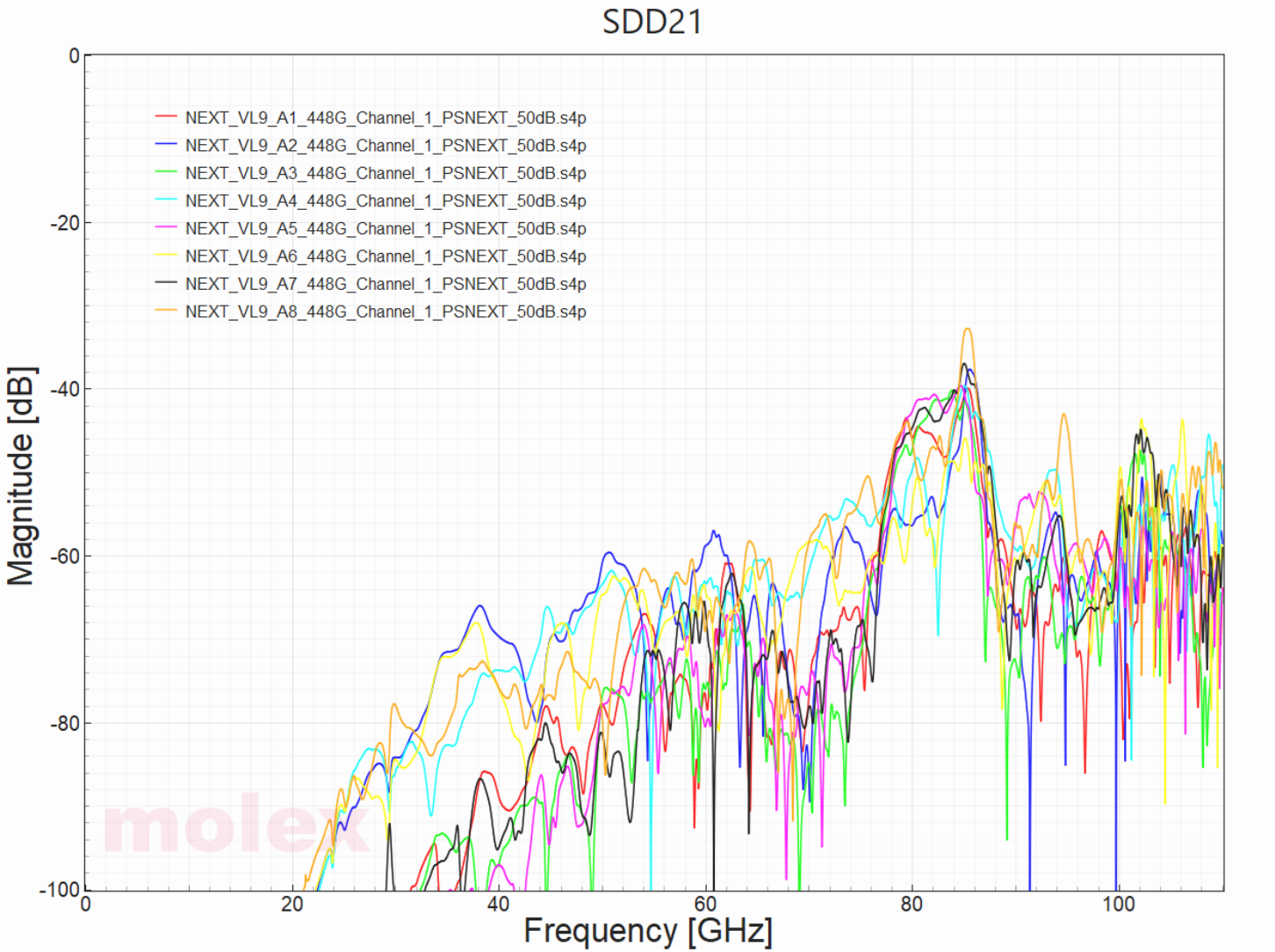

Individual NEXT Channel for PSNEXT_-55dB

Filename:

- NEXT_VL9_A1_448G_Channel_1_PSNEXT_55dB.s4p
- NEXT_VL9_A2_448G_Channel_1_PSNEXT_55dB.s4p
- NEXT_VL9_A3_448G_Channel_1_PSNEXT_55dB.s4p
- NEXT_VL9_A4_448G_Channel_1_PSNEXT_55dB.s4p
- NEXT_VL9_A5_448G_Channel_1_PSNEXT_55dB.s4p
- NEXT_VL9_A6_448G_Channel_1_PSNEXT_55dB.s4p
- NEXT_VL9_A7_448G_Channel_1_PSNEXT_55dB.s4p
- NEXT_VL9_A8_448G_Channel_1_PSNEXT_55dB.s4p

Port Order

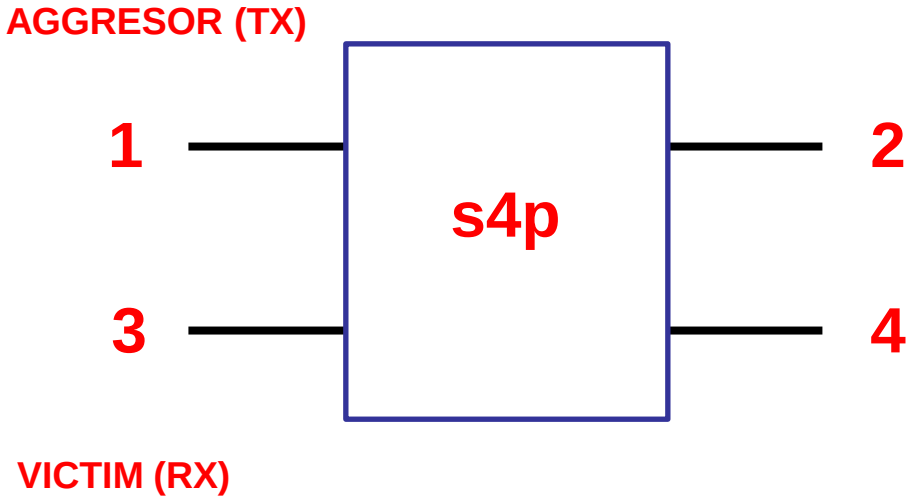

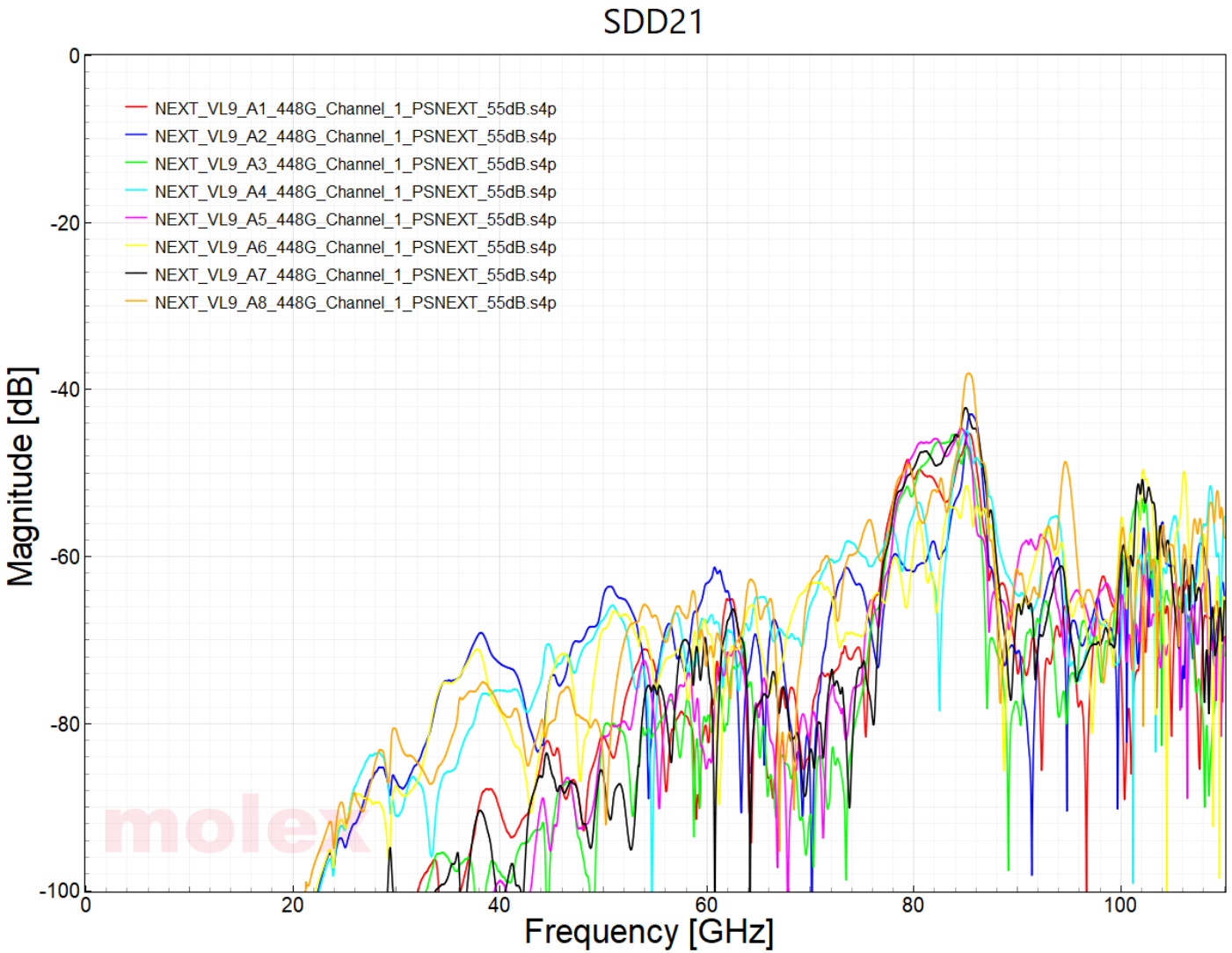

Individual NEXT Channel for PSNEXT_-60dB

Filename:

- NEXT_VL9_A1_448G_Channel_1_PSNEXT_60dB.s4p
- NEXT_VL9_A2_448G_Channel_1_PSNEXT_60dB.s4p
- NEXT_VL9_A3_448G_Channel_1_PSNEXT_60dB.s4p
- NEXT_VL9_A4_448G_Channel_1_PSNEXT_60dB.s4p
- NEXT_VL9_A5_448G_Channel_1_PSNEXT_60dB.s4p
- NEXT_VL9_A6_448G_Channel_1_PSNEXT_60dB.s4p
- NEXT_VL9_A7_448G_Channel_1_PSNEXT_60dB.s4p
- NEXT_VL9_A8_448G_Channel_1_PSNEXT_60dB.s4p

Port Order

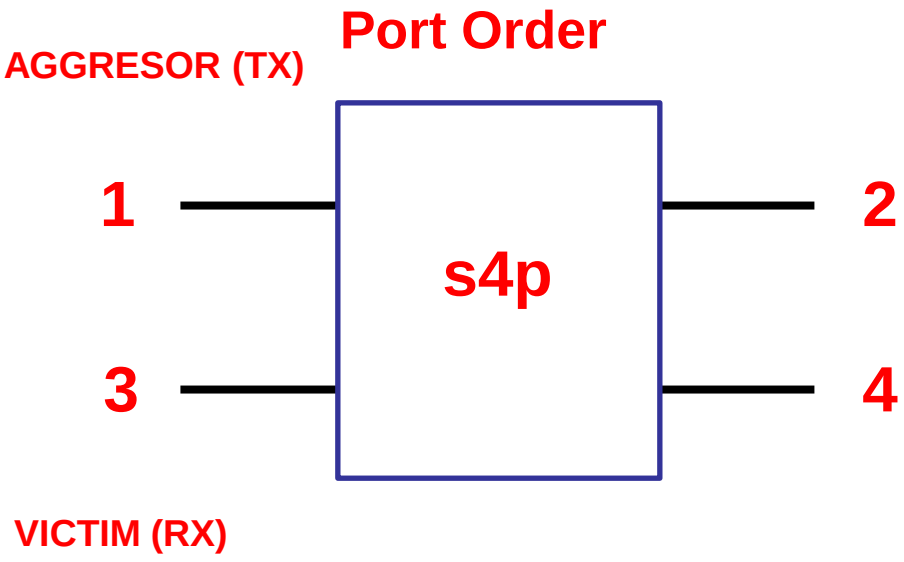

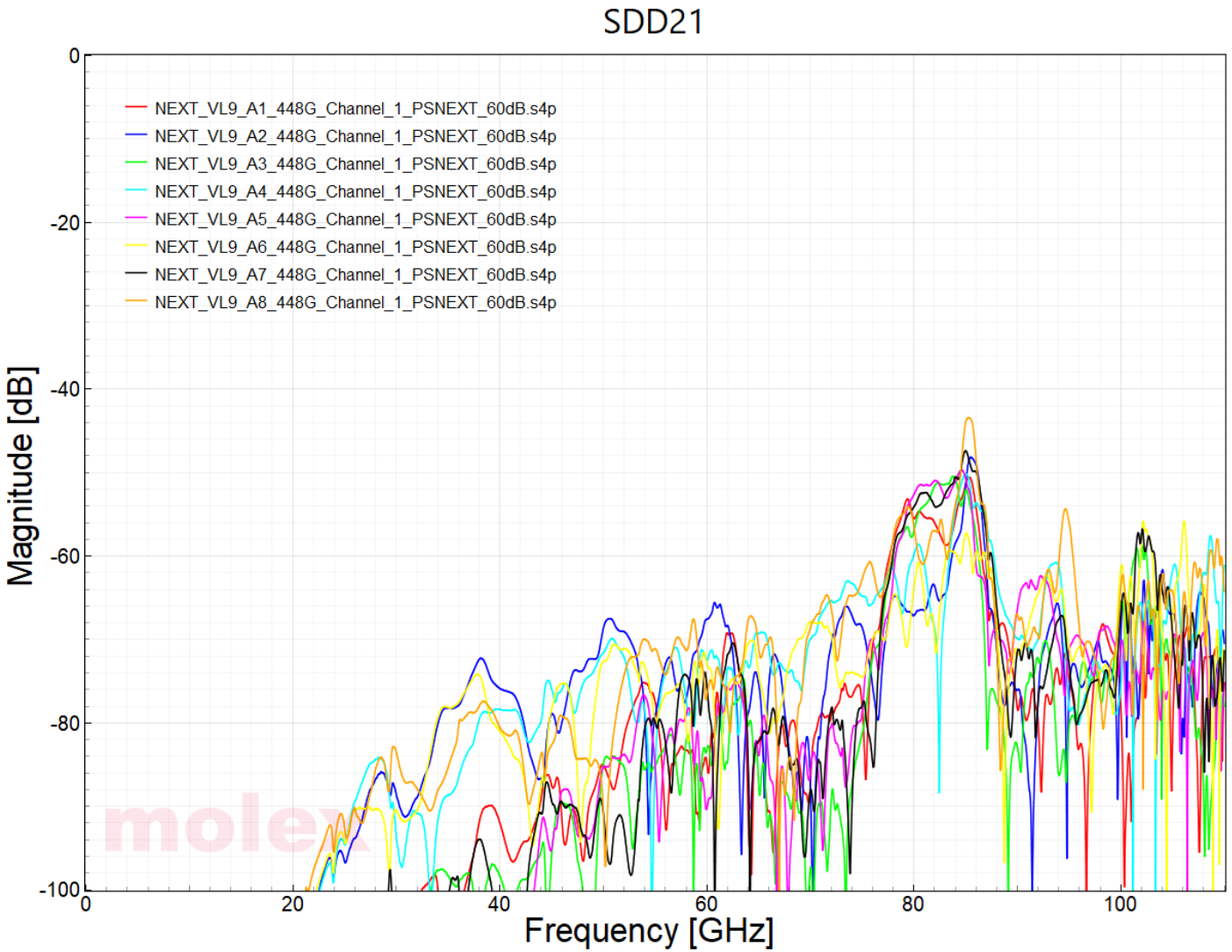

Individual NEXT Channel for PSNEXT_-65dB

Filename:

- NEXT_VL9_A1_448G_Channel_1_PSNEXT_65dB.s4p
- NEXT_VL9_A2_448G_Channel_1_PSNEXT_65dB.s4p
- NEXT_VL9_A3_448G_Channel_1_PSNEXT_65dB.s4p
- NEXT_VL9_A4_448G_Channel_1_PSNEXT_65dB.s4p
- NEXT_VL9_A5_448G_Channel_1_PSNEXT_65dB.s4p
- NEXT_VL9_A6_448G_Channel_1_PSNEXT_65dB.s4p
- NEXT_VL9_A7_448G_Channel_1_PSNEXT_65dB.s4p
- NEXT_VL9_A8_448G_Channel_1_PSNEXT_65dB.s4p

Port Order

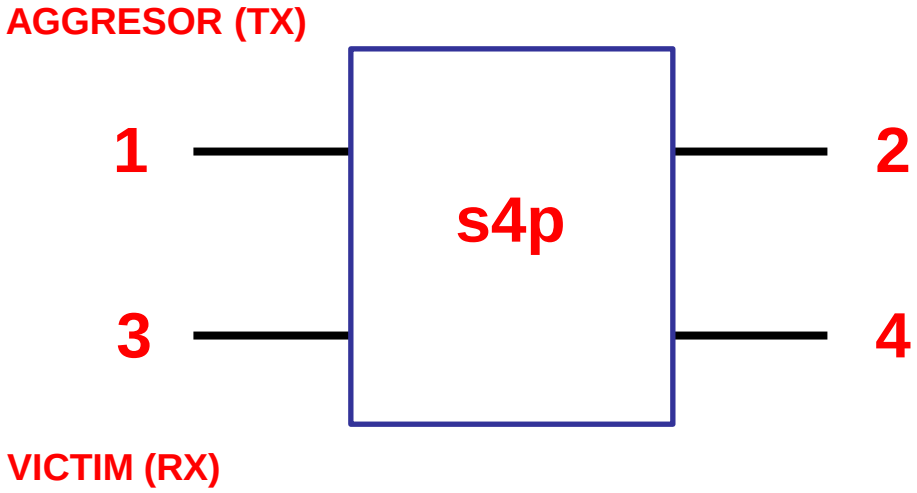

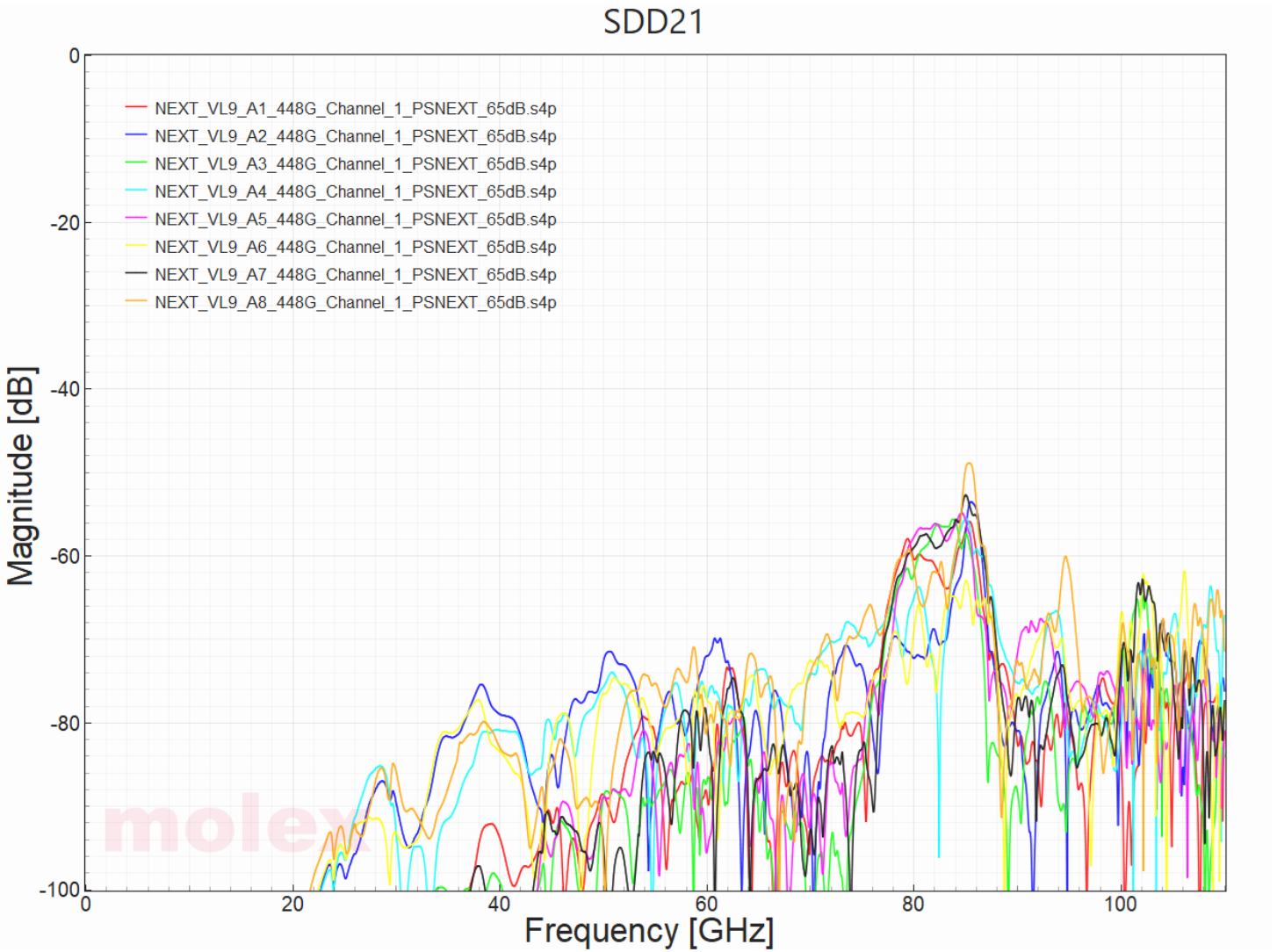

Individual NEXT Channel for PSNEXT_-70dB

Filename:

- NEXT_VL9_A1_448G_Channel_1_PSNEXT_70dB.s4p
- NEXT_VL9_A2_448G_Channel_1_PSNEXT_70dB.s4p
- NEXT_VL9_A3_448G_Channel_1_PSNEXT_70dB.s4p
- NEXT_VL9_A4_448G_Channel_1_PSNEXT_70dB.s4p
- NEXT_VL9_A5_448G_Channel_1_PSNEXT_70dB.s4p
- NEXT_VL9_A6_448G_Channel_1_PSNEXT_70dB.s4p
- NEXT_VL9_A7_448G_Channel_1_PSNEXT_70dB.s4p
- NEXT_VL9_A8_448G_Channel_1_PSNEXT_70dB.s4p
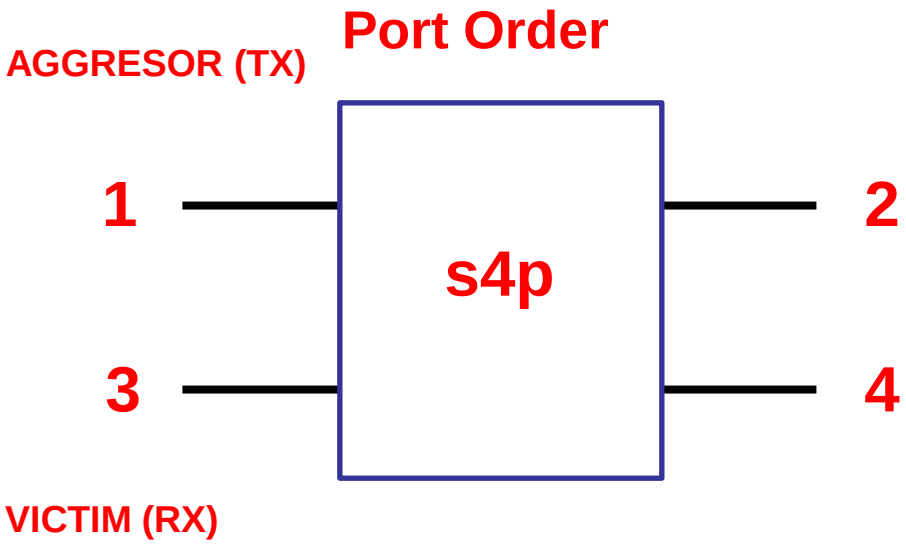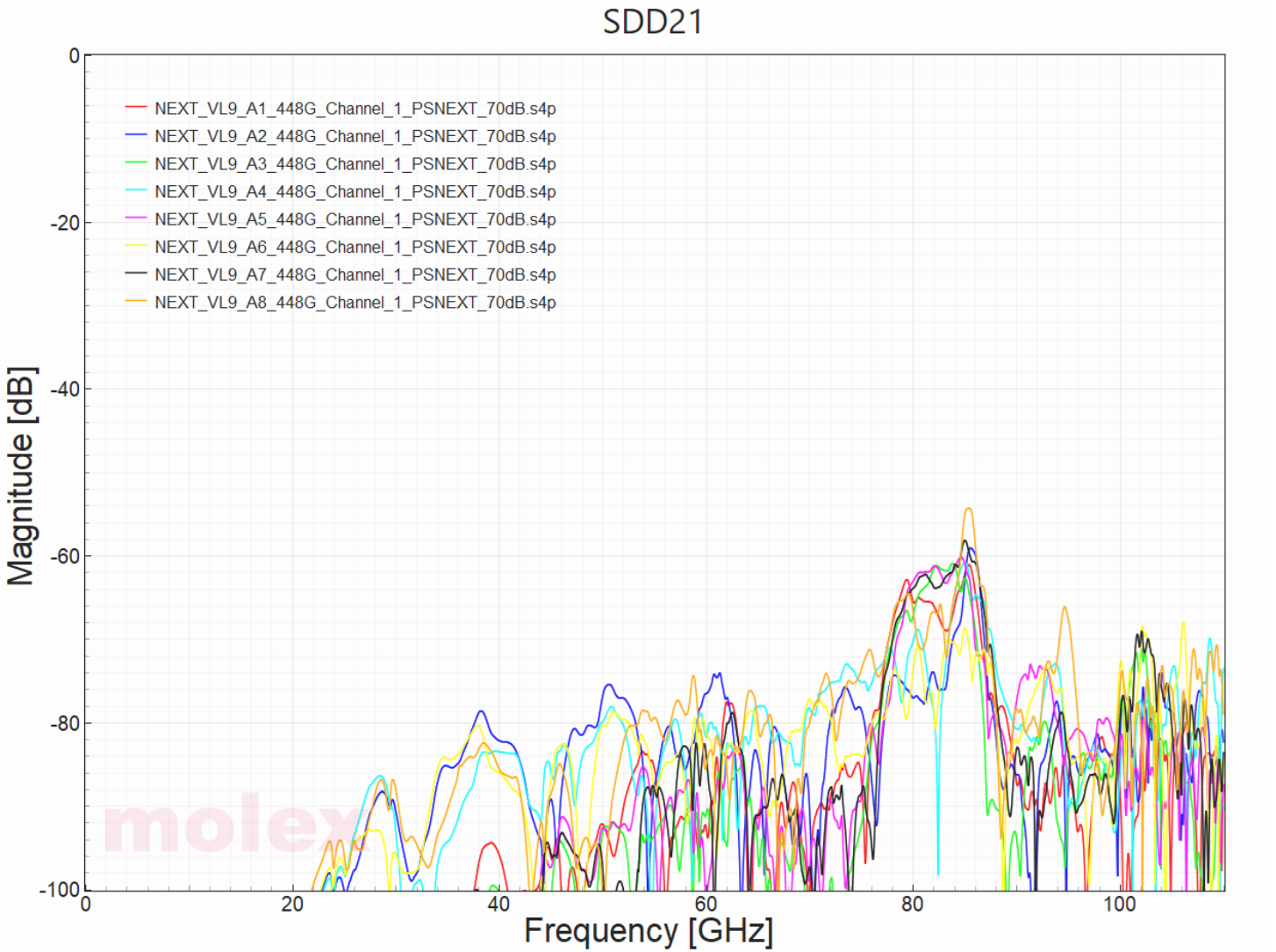
Port Order