Optical measurements: frequency of the roll-off cut-off of the Bessel-Thomson filter

Presentation in support of a comment previewing a comment against D2.0 (pending TF and WG approval to move forward to WG ballot)

Pavel Zivny, Lumilens

2026/Nov., for the “P802.3ds Bangkok meeting” Version 01a

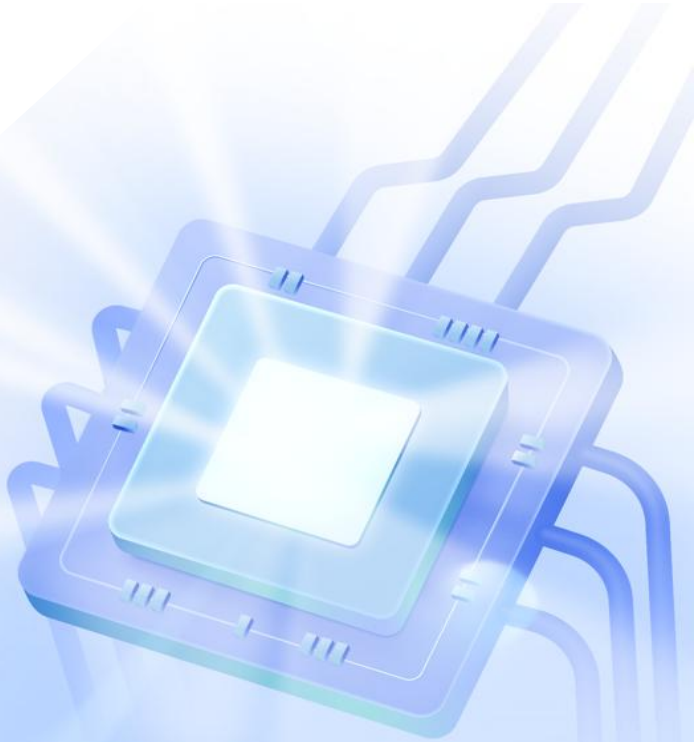

Supporters

- Adee Ran, Cisco
- Klaus Engenhart, Teradyne Quantifi Photonics
- Michael He, Terahop
- Mike Dudek, Marvell
- Piers Dawe, NVidia
- Ramana Murty, Broadcom
- Ahmad El-Chayeb, Keysight

Problem/Solution Summary

Problem definition

- Optical reference receiver has a property here described as end-of-BT-compliance, $f_{BT\text{-}end}$;
  in D1.3 this is: $f_{BT\text{-}end} = 1.3 * 106.25 = 138.125$ [GHz,GHz]
  (or similar when fiber BW is included)
- Setting the $f_{BT\text{-}end}$ so high is not in reach of practical measurement equipment, i.e. an MM oscilloscope with a high sensitivity, fit for manufacturing;
- And it is not necessary since the DUTs do not have significant energy going that high
- And the receivers would not be impacted anyway since their BW is intentionally more limited
- Currently in clauses 193.9.3, Reference Receiver (page 67, lines 25–30);
  193.9.7, TDECQ (page 68, lines 15–22); 193.9.8, page 69 . Comment will be brought re. these on D2.0 .

Proposed solution:

1. Set a lower $f_{BT\text{-}end}$ (than the 138 GHz currently specified) for 802.3ds
2. Further work beyond this presentation and this task-force: similar for other standards

802.3 related clauses 180.9.2, 181.9.2, 182.9.2, 183.9.2 and 180.9.6.3 not discussed this 802.3ds presentation

Problem in D1.3
Optical Measurements reference receiver for 106 GBd: definition

This all follows the older Clause **180.9.2 Reference receiver:**

- A reference receiver is defined for transmitter measurements. The reference receiver is composed of an O/E converter, a clock recovery unit (CRU), and a pattern-triggered oscilloscope as shown in Figure 180–7. The combined frequency response of the O/E converter and oscilloscope has a 3 dB bandwidth of approximately 53.125 GHz with a fourth-order Bessel-Thomson response for frequencies up to at least **1.3 x 106.25 GHz** and a response no higher than –20 dB for frequencies greater than 1.3 x 106.25 GHz [bold mine, prz]

- So as is, the 4th order B-T has to be followed to **at least 138.125 GHz**
- This is measuring much beyond what the DUT RX does capture, and DUT TX generates
- This is unduly difficult with MM in 2026*
- The factor of **1.3** in fact was negotiated for 53 GBd only – it was 1.5 at 26 GBd PAM4; similar step down is needed for the 106 GBd
-

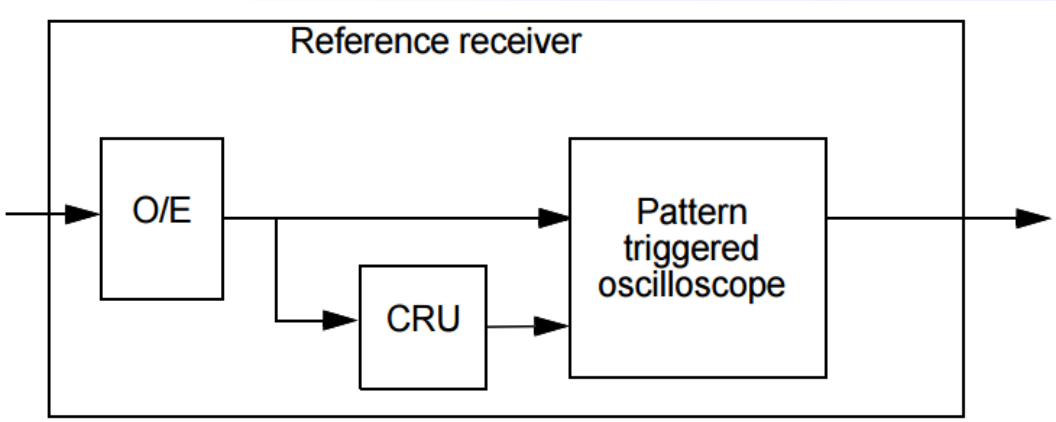

Figure 180–7—Reference receiver block diagram

*similarly so in SM, not discussed here

In D1.3 this issue is present in:

- subClause 193.9.3, Reference Receiver (page 67, lines 25–30);
- subClause 193.9.7, TDECQ (page 68, lines 15–22);
- subClause 193.9.8, page 69

In addition, this figures in the calculation of the additive noise

- 180.9.6.3 **Reference equalizer**
- The reference equalizer is a T-spaced, discrete-time equalizer with 15 feed-forward taps and a single decision feedback tap, where T is the symbol period. Equalizer coefficient constraints are given in Table 180–16. The reference equalizer may be implemented in the oscilloscope. The equalizer is modeled as shown in Figure 180–10, where — r(t) is the output of the reference receiver defined in 180.9.2 — η(t) is colored Gaussian noise, generated from additive white Gaussian noise (AWGN) *filtered by a Bessel-Thomson (BT) filter as defined in* **180.9.2 (bold,** *italics* mine, prz**)**

Current Nominal Optical Reference Receiver filter

- Current ORR filter is on the right (BW of 53.125 GHz or near that)
- $f_{BT\text{-}end}$ (i.e. filter response no longer has to be followed) around 138 GHz, i.e. the right-end of the plot

(Similar but slower responses additionally model the modal BW; this contribution presents only the base B-T)



Measured data:
1st order dependency: TECQ = f(ORR_BW)

- lowering the Bessel-Thomson BW_{-3dB} shows the expected dependency of TECQ result to the BW of the B-T
- The $f_{BT\text{-}end}$ is still at a very high frequency similar to 138 GHz of the D3.2

throughout the slides:
Source signal: BERT Keysight M8042A, MZM E/O; oscilloscope Keysight N1093A

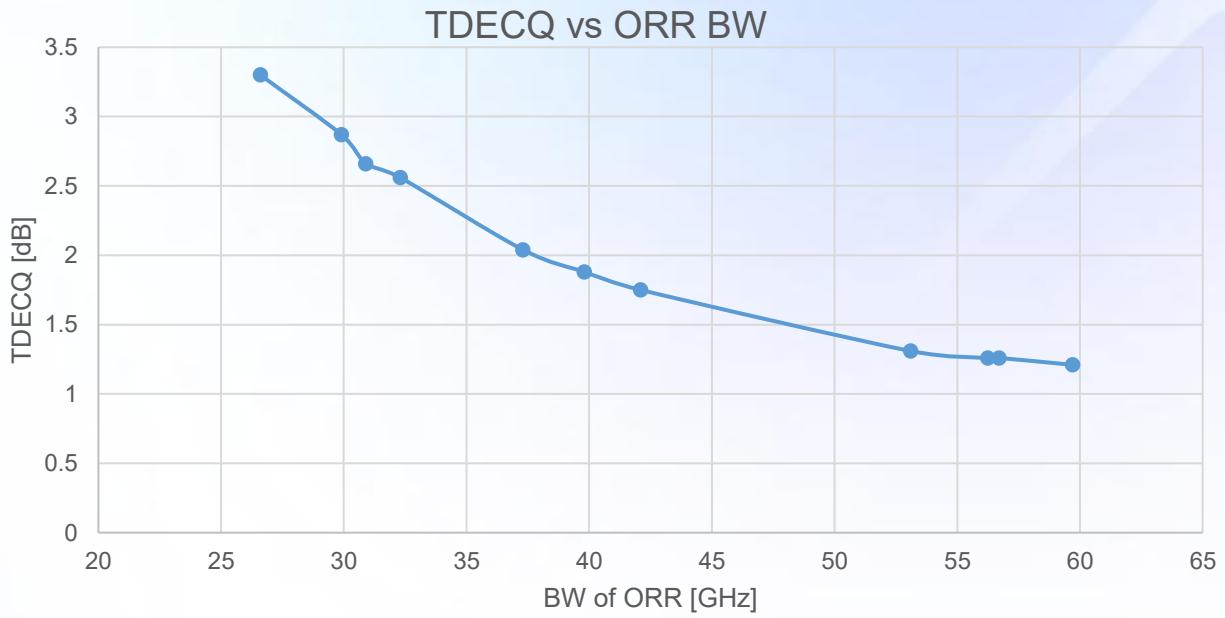

- Reasonable;
  leave this ORR BW as is.

Measured data:
2nd order dependency: TDECQ = f(ORR_BW Cut-off)

- TDECQ as a f of $f_{BT\text{-}end}$ (the Bessel-Thomson BW roll-off tail)
- (cut-off implemented as a 10th Order Butterworth filter; others show same result)

- Observe a (left) hockey-stick dependency of TDECQ on the $f_{BT\text{-}end}$
- The TDECQ value is stable above ca. 80 GHz

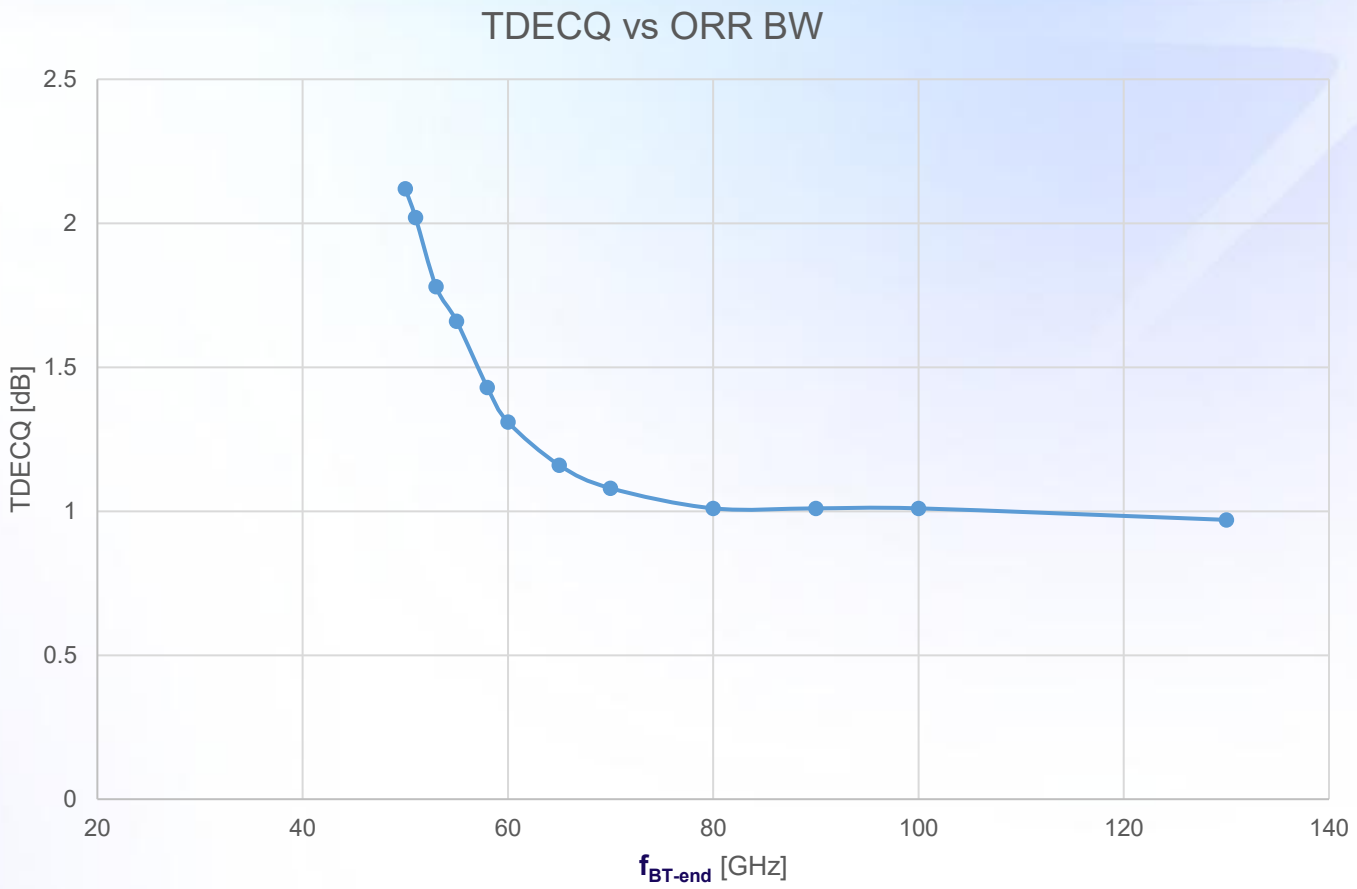

Noise processing set to “Preserve noise”; additive noise kept fixed.

Frequency-domain view (measured signal)

- Green trace: spectrum with just Bessel-Thomson 4th order
- Red trace: same signal, but here the B-T spectrum is cut-off with a Butterworth (in this example to 55 GHz)
- Note that the signal's energy is more than 30 dB down at 90 GHz

(a SM lab source used here)

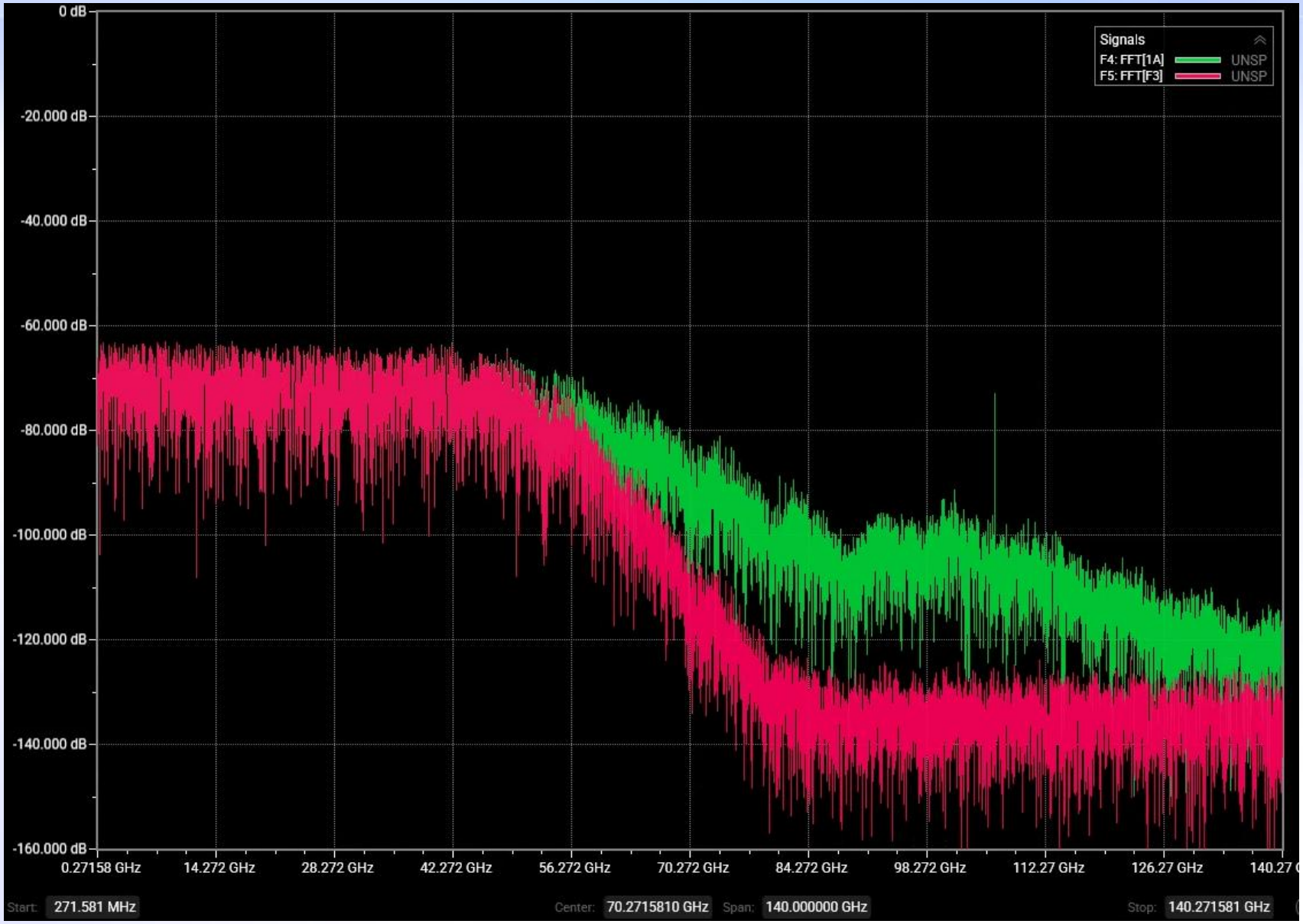

Conclusion: we don't need to measure with B-T response compliant to 138 GHz … and we shouldn't

The ORR's Bessel-Thomson end-of-compliance frequency, $f_{BT\text{-}end}$, was inherited from 802.3dj; it should be lowered, because it is mandated all the way to ≥138 GHz - much too far.

Proposal: in "193.9.3 Reference Receiver … has a…. fourth-order Bessel-Thomson response to at least" replace:

~~1.3 x 106.25 GHz and a response no higher than~~
~~–20 dB for frequencies greater than 1.3 x 106.25 GHz~~

With: 1.0 x 106.25 GHz and a response no higher than
nominal B-T or –20 dB, whichever is more, for frequencies greater than 1.0 x 106.25 GHz

Not detailed here: use the same "1.0" factor for all instances of the ORRs throughout.

Benefits:

- Enables lower noise in oscilloscope captures – hence more accurate measurements
- Enables MM T&M,
- Potentially lowers T&M expense

Future work: consider the same for SM (future, maintenance for .3dj)

Lumilens

Thanks!

